CARLSBAD MUNICIPAL WATER DISTRICT

San Diego County

California

CONTRACT DOCUMENTS, GENERAL PROVISIONS, SUPPLEMENTAL PROVISIONS AND TECHNICAL SPECIFICATIONS

FOR

VALVE REPLACEMENT PHASE II

CONTRACT NO. 5019-E

BID NO. PWS21-1038UTIL

e - Bidding

TABLE OF CONTENTS

Item **Page**

Notice Inviting Bids 8

Contractor's Proposal..... 14

Bid Security Form 24

Bidder’s Bond to Accompany Proposal 25

Guide for Completing the “Designation of Subcontractors” Form 26

Designation of Subcontractor and Amount of Subcontractor’s Bid Items 28

Bidder's Statement of Technical Ability and Experience..... 29

Bidder’s Certificate of Insurance for General Liability, Employers’ Liability, Automotive Liability and Workers’ Compensation 30

Bidder’s Statement Re Debarment..... 31

Bidder's Disclosure of Discipline Record ……..... 32

Noncollusion Declaration to Be Executed by Bidder and Submitted with Bid..... 34

Contract Public Works..... 35

Labor and Materials Bond 42

Faithful Performance/Warranty Bond 44

Optional Escrow Agreement for Surety Deposits in Lieu of Retention 46

GENERAL PROVISIONS

Section 1	Terms, Definitions Abbreviations and Symbols	
1-1	Terms	50
1-2	Definitions	50
1-3	Abbreviations	54
1-4	Units of Measure	57
1-5	Symbols	58
Section 2	Scope and Control of The Work	
2-1	Award and Execution of Contract	59
2-2	Assignment	59
2-3	Subcontracts	59
2-4	Contract Bonds	60
2-5	Plans and Specifications	61
2-6	Work to be Done	66
2-7	Subsurface Data	66
2-8	Right-of-Way	66
2-9	Surveying	66
2-10	Authority of Board and Engineer	70
2-11	Inspection	71
Section 3	Changes in Work	
3-1	Changes Requested by the Contractor	72
3-2	Changes Initiated by the Agency	72
3-3	Extra Work	73
3-4	Changed Conditions	76
3-5	Disputed Work	77
Section 4	Control of Materials	
4-1	Materials and Workmanship	83
4-2	Materials Transportation, Handling and Storage	87
Section 5	Utilities	
5-1	Location	88
5-2	Protection	88
5-3	Removal	89
5-4	Relocation	89
5-5	Delays	90
5-6	Cooperation	90
Section 6	Prosecution, Progress and Acceptance of the Work	
6-1	Construction Schedule and Commencement of Work	91
6-2	Prosecution of Work	95
6-3	Suspension of Work	96
6-4	Default by Contractor	96
6-5	Termination of Contract	97
6-6	Delays and Extensions of Time	97
6-7	Time of Completion	98
6-8	Completion, Acceptance, and Warranty	102

6-9 Liquidated Damages 103
6-10 Use of Improvement During Construction 104

Section 7 Responsibilities of the Contractor
7-1 Contractor's Equipment and Facilities 105
7-2 Labor 105
7-3 Liability Insurance 105
7-4 Workers' Compensation Insurance 105
7-5 Permits 106
7-6 The Contractor's Representative 107
7-7 Cooperation and Collateral Work 108
7-8 Project Site Maintenance 109
7-9 Protection and Restoration of Existing Improvements 110
7-10 Public Convenience and Safety 111
7-11 Patent Fees or Royalties 118
7-12 Advertising 118
7-13 Laws to be Observed 118
7-14 Antitrust Claims 119

Section 8 Facilities for Agency Personnel
8-1 General 120

Section 9 Measurement and Payment
9-1 Measurement of Quantities for Unit Price Work 121
9-2 Lump Sum Work 121
9-3 Payment 121
9-4 Bid Items 124

SUPPLEMENTAL PROVISIONS TO PART 2, 3 AND 6 OF THE SSPWC

Part 2 Construction Materials

Section 200 Rock Materials
200-1 Rock Products 127
200-2 Untreated Base Materials..... 128

Section 201 Concrete, Mortar and Related Materials
201-1 Portland Cement Concrete 129
201-3 Expansion Joint Filler and Joint Sealants..... 131

Section 203 Bituminous Materials
203-6 Asphalt Concrete 132
203-11 Asphalt Rubber Hot Mix (ARHM) Wet Process 133

Section 207 Pipe
207-2 Reinforced Concrete Pipe..... 133
207-9 Iron Pipe and Fittings..... 134
207-10 Steel Pipe 134
207-25 Underground Utility Marking Tape..... 135

Section 209 Signals, Lighting and Electrical Systems
209-1 General..... 136

Section 210 Paint and Protective Coatings
210-1 Paint 136
210-3 Galvanizing..... 137

Section 212 Landscape and Irrigation Materials
212-1 Landscape Materials..... 138
212-2 Irrigation System Materials..... 142
212-3 Electrical Materials..... 144

Section 214 Pavement Markers
214-5 Reflective Pavement Markers 146

Section 215 Fencing
215-1 Environmental Fencing 147

Part 3 Construction Methods

Section 300 Earthwork
300-1 Clearing and Grubbing 148
300-2 Unclassified Excavation 148
300-3 Structure Excavation and Backfill..... 150
300-9 Geotextiles for Erosion Control and Water Pollution Control. 150
300-13 Storm Water Pollution Prevention Plan 151

Section 301 Treated Soil, Subgrade Preparation and Placement of Base Materials
301-1 Subgrade Preparation..... 154

Section 302 Roadway Surfacing
302-1 Roadways Surfacing General 154
302-5 Asphalt Concrete Pavement 156

302-11 Asphalt Pavement Repairs and Remediation 157

Section 303 Concrete and Masonry Construction.
303-1 Concrete Structures 158
303-2 Air-Placed Concrete 158
303-5 Concrete Curbs, Walks, Gutters, Cross Gutters, Alley Intersections, Access Ramps, And Driveways 159
303-6 Stamped Concrete 159

Section 304 Metal Fabrication and Construction
304-3 Chain Link Fence 159

Section 306 Underground Conduit Construction
306-1 Open Trench Operations 159
306-5 Abandonment of Conduits and Structures 163

Section 310 Painting
310-5 Painting Various Surfaces 163
310-7 Permanent Signing 164

Section 312 Pavement Marker Placement and Removal
312-1 Placement 165

Section 313 Temporary Traffic Control Devices
313-1 Temporary Traffic Pavement Markers 165
313-2 Temporary Traffic Signing 166
313-3 Temporary Railing (Type K) and Crash Cushions 166
313-4 Measurement and Payment 168

Part 6 Modified Asphalt, Pavement and Processes

600-3 Rubberized Emulsion – Aggregate Slurry 169

Appendix A 170
Appendix B 171

TECHNICAL SPECIFICATIONS

DIVISION 01 – GENERAL REQUIREMENTS

01150	Measurement and Payment
01390	Pre-Construction Survey

DIVISION 02 – SITE WORK

02060	Asbestos Abatement
02662	Asbestos Cement Pipe Testing

DIVISION 15 – MECHANICAL

15041	Disinfection of Piping

CARLSBAD MUNICIPAL WATER DISTRICT, CALIFORNIA
NOTICE INVITING BIDS

Until 11 a.m. on _____, 2020, the Carlsbad Municipal Water District shall accept bids via electronic format via the City of Carlsbad Electronic Bidding Site, PlanetBids, which may be accessed at https://www.carlsbadca.gov/services/depts/finance/contracting/default.asp, for performing the work as follows: This project work includes replacing valve clusters across twenty (20) project sites across the Carlsbad water distribution system. All valves, associated fittings, pipe segments (through one full pipe joint) will be removed and replaced with new valves, appurtenances, and PVC pipe. Some sites require the addition of a new valve to complete the cluster, or relocation/ removal of floating valves.

VALVE REPLACEMENT PHASE II
CONTRACT NO. 5019-E
BID NO. PWS21-1138UTIL

ELECTRONIC FORMAT RECEIPT AND OPENING OF BIDS: Bids will be received in electronic format (eBids) EXCLUSIVELY at the City of Carlsbad's electronic bidding (eBidding) site, at: https://www.carlsbadca.gov/services/depts/finance/contracting/default.asp **and are due by the date and time shown on the cover of this solicitation.**

BIDDERS MUST BE PRE-REGISTERED with the City's bidding system and possess a system-assigned Digital ID in order to submit an electronic bid.

The City's electronic bidding (eBidding) system will automatically track information submitted to the site including IP addresses, browsers being used and the URLs from which information was submitted. In addition, the City's bidding system will keep a history of every login instance including the time of login, and other information about the user's computer configuration such as the operating system, browser type, version, and more. Because of these security features, Bidders who disable their browsers' cookies will not be able to log in and use the City's bidding system.

The City's electronic bidding system is responsible for bid tabulations. Upon the bidder's or proposer's entry of their bid, the system will ensure that all required fields are entered. The system will not accept a bid for which any required information is missing. This includes all necessary pricing, subcontractor listing(s) and any other essential documentation and supporting materials and forms requested or contained in these solicitation documents.

BIDS REMAIN SEALED UNTIL DUE DATE AND TIME.
eBids are transmitted into the City's bidding system via hypertext transfer protocol secure (https) mechanism using SSL 128-256-bit security certificates issued from Verisign/Thawte which encrypts data being transferred from client to server. Bids submitted prior to the Due Date and Time are not available for review by anyone other than the submitter, who will have until the Due Date and Time to change, rescind or retrieve its bid should they desire to do so**.**

BIDS MUST BE SUBMITTED BY DUE DATE AND TIME.
Once the deadline is reached, no further submissions are accepted into the system. Once the Due Date and Time has passed, bidders, proposers, the general public, and City staff are able to

immediately see the results online. City staff may then begin reviewing the submissions for responsiveness, compliance and other issues.

RECAPITULATION OF THE WORK.
Bids shall not contain any recapitulation of the Work. Conditional Bids may be rejected as being non-responsive. Alternative proposals will not be considered unless called for.

BIDS MAY BE WITHDRAWN by the Bidder prior to, but not after, the time set as Due Date and Time.

Important Note: Submission of the electronic bid into the system may not be instantaneous. Due to the speed and capabilities of the user's internet service provider (ISP), bandwidth, computer hardware and other variables, it may take time for the bidder's submission to upload and be received by the City's eBidding system. It is the bidder's sole responsibility to ensure their bids are received on time by the City's eBidding system. The City of Carlsbad is not responsible for bids that do not arrive by the Due Date and Time.

ELECTRONIC SUBMISSIONS CARRY FULL FORCE AND EFFECT.
The Bidder, by submitting their electronic proposal, agrees to and certifies under penalty of perjury under the laws of the State of California, that the certification, forms and affidavits submitted as part of this proposal are true and correct. The bidder, by submitting its electronic bid, acknowledges that doing so carries the same force and full legal effect as a paper submission with a longhand (wet) signature. By submitting an electronic bid, the bidder certifies that the bidder has thoroughly examined and understands the entire Contract Documents (which consist of the plans and specifications, drawings, forms, affidavits and the solicitation documents), and that by submitting the eBid as its bid proposal, the bidder acknowledges, agrees to and is bound by the entire Contract Documents, including any addenda issued thereto, and incorporated by reference in the Contract Documents.

BIDS ARE PUBLIC RECORDS
Upon receipt by the City, bids shall become public records subject to public disclosure. It is the responsibility of the Bidder to clearly identify any confidential, proprietary, trade secret or otherwise legally privileged information contained within the proposal's General references to sections of the California Public Records Act (PRA) will not suffice. If the Bidder does not provide applicable case law that clearly establishes that the requested information is exempt from the disclosure requirements of the PRA, the City shall be free to release the information when required in accordance with the PRA, pursuant to any other applicable law, or by order of any court or government agency, and the Bidder agrees to hold the City harmless for any such release of this information.

INSTRUCTIONS TO BIDDERS AND BID REQUIREMENTS
This bid and the terms of the Contract Documents and General Provisions constitute an irrevocable offer that shall remain valid and in full force for a period of 90 days and such additional time as may be mutually agreed upon by the Carlsbad Municipal Water District and the Bidder.

No bid will be received unless it is made on a proposal form furnished by the Purchasing Department. Each bid must be accompanied by security in a form and amount required by law. The bidder's security of the second and third next lowest responsive bidders may be withheld until the Contract has been fully executed. The security submitted by all other unsuccessful bidders shall be returned to them, or deemed void, within ten (10) days after the Contract is awarded. Pursuant to the provisions of law (Public Contract Code section 10263), appropriate securities may be

substituted for any obligation required by this notice or for any monies withheld by the District to ensure performance under this Contract. Section 10263 of the Public Contract Code requires monies or securities to be deposited with the District or a state or federally chartered bank in California as the escrow agent. The escrow agent shall maintain insurance to cover negligent acts and omissions of the agent in connection with the handling of retentions under this section in an amount not less than $100,000 per contract.

The Carlsbad Municipal Water District may disqualify a contractor or subcontractor from participating in bidding when a contractor or subcontractor has been debarred by the Carlsbad Municipal Water District or another jurisdiction in the State of California as an irresponsible bidder.

The work shall be performed in strict conformity with the plans, provisions, and specifications as approved by the City Council of the City of Carlsbad on file with the City Clerk's Office. The specifications for the work include City of Carlsbad Technical Specifications and the Standard Specifications for Public Works Construction, Parts 2 & 3, all hereinafter designated "SSPWC", as amended. Specification Reference is hereby made to the plans and specifications for full particulars and description of the work. The General Provisions (Part 1) to the SSPWC do not apply.

The Carlsbad Municipal Water District encourages the participation of minority and women-owned businesses.

The Carlsbad Municipal Water District encourages all bidders, suppliers, manufacturers, fabricators and contractors to utilize recycled and recyclable materials when available, appropriate and approved by the Engineer.

BID DOCUMENTS

The bid documents comprise the following documents which must be completed and properly executed including notarization, where indicated at time of Bid.

1. Contractor's Proposal
2. Bidder's Bond (At Time of Bid Submit PDF Copy via PlanetBids / All Bidders). Bid Bond (Original) Due By 5 PM Next Business Day After Bid Opening/ 5 Apparent Low Bidders.
3. Noncollusion Declaration
4. Designation of Subcontractor and Amount of Subcontractor's Bid
5. Bidder's Statement of Technical Ability and Experience
6. Acknowledgement of Addendum(a)
7. Certificate of Insurance. The riders covering the City, its officials, employees and volunteers may be omitted at the time of bid submittal but shall be provided by the Bidder prior to award of this contract.
8. Bidder's Statement Re Debarment
9. Bidder's Disclosure of Discipline Record
10. Escrow Agreement for Security Deposits -(optional, must be completed if the Bidder wishes to use the Escrow Agreement for Security)

ENGINEER'S ESTIMATE:

All bids will be compared on the basis of the Engineer's Estimate. The estimated quantities are approximate and serve solely as a basis for the comparison of bids. The Engineer's Estimate is $2,200,000.

TIME OF COMPLETION:
The contractor shall complete the Work within the time set in the contract as defined in the General Provisions Section 6-7.

SPECIALTY CONTRACTORS:
ACCEPTABLE LICENSE TYPES
Except as provided herein a bid submitted to the District by a Contractor who is not licensed as a contractor pursuant to the Business and Professions Code shall be considered nonresponsive and shall be rejected by the District. In all contracts where federal funds are involved, no bid submitted shall be invalidated by the failure of the bidder to be licensed in accordance with California law. Where federal funds are involved the contractor shall be properly licensed at the time the contract is awarded. In all other cases the contractor shall state their license number, expiration date and classification in the proposal, under penalty of perjury. This invitation to bid does not involve federal funds. The following classifications are acceptable for this contract: **A-General Engineering**.

ESCROW AGREEMENT
If the Contractor intends to utilize the escrow agreement included in the contract documents in lieu of the usual 5% retention from each payment, these documents must be completed and submitted with the signed contract. The escrow agreement may not be substituted at a later date.

OBTAINING PLANS AND SPECIFICATIONS
Sets of plans, various supplemental provisions, and Contract documents may be obtained from the City of Carlsbad website at https://www.carlsbadca.gov/services/depts/finance/contracting/default.asp. Paper copies will not be sold.

INTENT OF PLANS AND SPECIFICATIONS
Any prospective bidder who is in doubt as to the intended meaning of any part of the drawings, specifications or other contract documents, or finds discrepancies in or omissions from the drawings and specifications may submit to the Engineer a written request for clarification or correction. Any response will be made only by a written addendum duly issued by the Engineer a copy of which will be mailed or delivered to each person receiving a set of the contract documents. No oral response will be made to such inquiry. **Prior to the award of the contract, no addition to, modification of or interpretation of any provision in the contract documents will be given by any agent, employee or contractor of the Carlsbad Municipal Water District except as hereinbefore specified. No bidder may rely on directions given by any agent, employee or contractor of the Carlsbad Municipal Water District except as hereinbefore specified.**

BIDDER'S INQUIRIES
Questions on the bid documents during the bid period shall be submitted in writing, via email, solely to:

Graham Jordan, Contract Administrator
graham.jordan@carlsbadca.gov

Questions shall be definite and certain and shall reference applicable drawing sheets, notes, details or specification sheets.

The cutoff date to submit questions is August 7, 2020 at 5 p.m. No questions will be entertained after that date.

The answers to questions submitted during the bidding period will be published in an addendum and provided to those bidding on the project no later than August 12, 2020.

REJECTION OF BIDS

The Carlsbad Municipal Water District reserves the right to reject any or all bids and to waive any minor irregularity or informality in such bids.

PREVAILING WAGE TO BE PAID

The general prevailing rate of wages for each craft or type of worker needed to execute the Contract shall be those as determined by the Director of Industrial Relations pursuant to the sections 1770, 1773, and 1773.1 of the Labor Code. Pursuant to section 1773.2 of the Labor Code, a current copy of applicable wage rates is on file in the Office of the City Engineer. The Contractor to whom the Contract is awarded shall not pay less than the said specified prevailing rates of wages to all workers employed by him or her in the execution of the Contract.

The Prime Contractor shall be responsible for insuring compliance with provisions of section 1777.5 of the Labor Code and section 4100 et seq. of the Public Contracts Code, "Subletting and Subcontracting Fair Practices Act." The City Engineer is the District's "duly authorized officer" for the purposes of section 4107 and 4107.5.

The provisions of Part 7, Chapter 1, of the Labor Code commencing with section 1720 shall apply to the Contract for work.

A contractor or subcontractor shall not be qualified to bid on, be listed in a bid proposal, subject to the requirements of Section 4104 of the Public Contract Code or engage in the performance of any contract for public work, unless currently registered and qualified to perform public work pursuant to Section 1725.5. This project is subject to compliance monitoring and enforcement by the Department of Industrial Relations.

The Prime Contractor and all subcontractors shall comply with Section 1776 of the Labor Code, which generally requires keeping accurate payroll records, verifying and certifying payroll records, and making them available for inspection. Contractor shall require all subcontractors to comply with Section 1776.

PRE-BID MEETING

A pre-bid meeting and tour of the project site will be held at 2 p.m. on August 18, 2020 at the Carlsbad Municipal Water District located at 5950 El Camino Real, Carlsbad, CA 92008.

UNIT PRICES AND COMPUTATION OF BIDS

All bids are to be computed on the basis of the given estimated quantities of work, as indicated in this proposal, times the unit price as submitted by the bidder.

ADDENDA

Bidders are advised to verify the issuance of all addenda and receipt thereof one day prior to bidding. Submission of bids without acknowledgment of addenda may be cause of rejection of bid.

BOND AND INSURANCE REQUIREMENTS

The Contractor shall provide bonds to secure faithful performance and warranty of the work in an amount equal to one hundred percent (100%) of the Contract price on this project. The Contractor shall provide bonds to secure payment of laborers and materials suppliers, in an amount equal to one hundred percent (100%) of the total amount payable by the terms of the contract. These

bonds shall be kept in full force and effect during the course of this project and shall extend in full force and effect and be retained by the District until they are released as stated in the General Provisions section of this contract. All bonds are to be placed with a surety insurance carrier admitted and authorized to transact the business of insurance in California and whose assets exceed their liabilities in an amount equal to or in excess of the amount of the bond. The bonds are to be accompanied by the following documents:
1) An original, or a certified copy, of the unrevoked appointment, power of attorney, by laws, or other instrument entitling or authorizing the person who executed the bond to do so.
2) A certified copy of the certificate of authority of the insurer issued by the insurance commissioner.

If the bid is accepted, the District may require copies of the insurer's most recent annual statement and quarterly statement filed with the Department of Insurance pursuant to Article 10 (commencing with section 900) of Chapter 1 of Part 2 of Division 1 of the Insurance Code, within 10 calendar days of the insurer's receipt of a request to submit the statements.

Insurance is to be placed with insurers that:
1) Have a rating in the most recent Best's Key Rating Guide of at least A-:VII.
2) Are admitted and authorized to transact the business of insurance in the State of California by the Insurance Commissioner.

Auto policies offered to meet the specification of this contract must:
1) Meet the conditions stated above for all insurance companies.
2) Cover <u>any vehicle</u> used in the performance of the contract, used onsite or offsite, whether owned, non-owned or hired, and whether scheduled or non-scheduled.

Workers' compensation insurance required under this contract must be offered by a company meeting the above standards with the exception that the Best's rating condition is waived. The District does accept policies issued by the State Compensation Fund meeting the requirement for workers' compensation insurance.

The Contractor shall be required to maintain insurance as specified in the Contract. Any additional cost of said insurance shall be included in the bid price.

The award of the contract by the District is contingent upon the Contractor submitting the required bonds and insurance, as described in the contract, within twenty days of bid opening. If the Contractor fails to comply with these requirements, the District may award the contract to the second or third lowest bidder and the bid security of the lowest bidder may be forfeited.

<u>BUSINESS LICENSE</u>
The prime contractor and all subcontractors are required to have and maintain a valid City of Carlsbad Business License for the duration of the contract.

Approved by the Board of Directors of the Carlsbad Municipal Water District, California, by Resolution No. _____, adopted on the 28th day of July 2020.

July 29, 2020	
Date	Graham Jordan, Deputy Clerk

CARLSBAD MUNICIPAL WATER DISTRICT

VALVE REPLACEMENT PHASE II
CONTRACT NO. 5019-E

CONTRACTOR'S PROPOSAL

Board of Directors
Carlsbad Municipal Water District
1200 Carlsbad Village Drive
Carlsbad, California 92008

The undersigned declares he/she has carefully examined the location of the work, read the Notice Inviting Bids, examined the Plans, Specifications, General Provisions, Contract Documents, and addenda thereto, and hereby proposes to furnish all labor, materials, equipment, transportation, and services required to do all the work to complete Contract No. 5019-E in accordance with the Plans, Specifications, General Provisions, Contract Documents, and addenda thereto and that he/she will take in full payment therefore the following unit prices for each item complete:

BID SCHEDULE "A" VALVE REPLACEMENT PHASE II: BASE BID

Item No.	Description	Approx. Quantity and Unit	Unit Price	Total Amount (Figures)
1	Furnish all labor, materials, equipment, services and appurtenant work to complete the construction at Site 1. _____ _____ (Price in Words)	LS		$_____
2	Furnish all labor, materials, equipment, services and appurtenant work to complete the construction at Site 2. _____ _____ (Price in Words)	LS		$_____

Item No.	Description	Approx. Quantity and Unit	Unit Price	Total Amount (Figures)
3	Furnish all labor, materials, equipment, services and appurtenant work to complete the construction at Site 3. _____ _____ (Price in Words)	LS		$_____
4	Furnish all labor, materials, equipment, services and appurtenant work to complete the construction at Site 4. _____ _____ (Price in Words)	LS		$_____
5	Furnish all labor, materials, equipment, services and appurtenant work to complete the construction at Site 5. _____ _____ (Price in Words)	LS		$_____
6	Furnish all labor, materials, equipment, services and appurtenant work to complete the construction at Site 6. _____ _____ (Price in Words)	LS		$_____
7	Furnish all labor, materials, equipment, services and appurtenant work to complete the construction at Site 7. _____ _____ (Price in Words)	LS		$_____

Item No.	Description	Approx. Quantity and Unit	Unit Price	Total Amount (Figures)
8	Furnish all labor, materials, equipment, services and appurtenant work to complete the construction at Site 8. _____ _____ (Price in Words)	LS		$_____
9	Furnish all labor, materials, equipment, services and appurtenant work to complete the construction at Site 9. _____ _____ (Price in Words)	LS		$_____
10	Furnish all labor, materials, equipment, services and appurtenant work to complete the construction at Site 10. _____ _____ (Price in Words)	LS		$_____
11	Furnish all labor, materials, equipment, services and appurtenant work to complete the construction at Site 11. _____ _____ (Price in Words)	LS		$_____
12	Furnish all labor, materials, equipment, services and appurtenant work to complete the construction at Site 12. _____ _____ (Price in Words)	LS		$_____

Item No.	Description	Approx. Quantity and Unit	Unit Price	Total Amount (Figures)
13	Furnish all labor, materials, equipment, services and appurtenant work to complete the construction at Site 13. _____ _____ (Price in Words)	LS		$_____
14	Furnish all labor, materials, equipment, services and appurtenant work to complete the construction at Site 14. _____ _____ (Price in Words)	LS		$_____
15	Furnish all labor, materials, equipment, services and appurtenant work to complete the construction at Site 15. _____ _____ (Price in Words)	LS		$_____
16	Furnish all labor, materials, equipment, services and appurtenant work to complete the construction at Site 16. _____ _____ (Price in Words)	LS		$_____
17	Furnish all labor, materials, equipment, services and appurtenant work to complete the construction at Site 17. _____ _____ (Price in Words)	LS		$_____

Item No.	Description	Approx. Quantity and Unit	Unit Price	Total Amount (Figures)
18	Furnish all labor, materials, equipment, services and appurtenant work to complete the construction at Site 18.	LS		$_____
	(Price in Words)			
19	Furnish all labor, materials, equipment, services and appurtenant work to complete the construction at Site 19.	LS		$_____
	(Price in Words)			
20	Furnish all labor, materials, equipment, services and appurtenant work to complete the construction at Site 20.	LS		$_____
	(Price in Words)			
21	Mobilization/Demobilization	Not to Exceed 5%		$_____
	(Price in Words)			
22	Record Drawings	LS		$_____
	(Price in Words)			
23	Unforeseen Site Conditions	ALLOW.		$50,000
	(Price in Words)			

Item No.	Description	Approx. Quantity and Unit	Unit Price	Total Amount (Figures)
24	Asbestos Cement Pipe Testing _____ _____ (Price in Words)	20 EA	$_____	$_____
25	Traffic Control Plans _____ _____ (Price in Words)	LS		$_____
26	Tier II SWPPP _____ _____ (Price in Words)	LS		$_____

BID SCHEDULE "B" VALVE REPLACEMENT PHASE II: UNIT PRICE ITEMS

27	Asphalt Base Course _____ _____ (Unit Price in Words)	TON	$_____
28	Asphalt Paving _____ _____ (Unit Price in Words)	TON	$_____
29	6" C900 PVC Pipe Installation _____ _____ (Unit Price in Words)	LF	$_____
30	8" C900 PVC Pipe Installation _____ _____ (Unit Price in Words)	LF	$_____

Item No.	Description	Approx. Quantity and Unit	Unit Price	Total Amount (Figures)
31	10" C900 PVC Pipe Installation _____ _____ (Unit Price in Words)	LF	$_____	
32	12" C900 PVC Pipe Installation _____ _____ (Unit Price in Words)	LF	$_____	
33	14" C900 PVC Pipe Installation _____ _____ (Unit Price in Words)	LF	$_____	
34	16" C900 PVC Pipe Installation _____ _____ (Unit Price in Words)	LF	$_____	

Total amount of base bid in words for Schedule "A" _____

_____

Carlsbad Municipal Water District shall determine the low bid based on Schedule "A" only.

Price(s) given above are firm for 90 days after date of bid opening.

Addendum(a) No(s). _____ has/have been received and is/are included in this proposal.

The Undersigned has carefully checked all of the above figures and understands that the District will not be responsible for any error or omission on the part of the Undersigned in preparing this bid.

The Undersigned agrees that in case of default in executing the required Contract with necessary bonds and insurance policies within twenty (20) days from the date of award of Contract by the Board of Directors of the Carlsbad Municipal Water District, the District may administratively

authorize award of the contract to the second or third lowest bidder and the bid security of the lowest bidder may be forfeited.

The Undersigned bidder declares, under penalty of perjury, that the undersigned is licensed to do business or act in the capacity of a contractor within the State of California, validly licensed under license number _____, classification _____ which expires on _____, and Department of Industrial Relations PWC registration number _____ which expires on _____, and that this statement is true and correct and has the legal effect of an affidavit.

A bid submitted to the District by a Contractor who is not licensed as a contractor pursuant to the Business and Professions Code shall be considered nonresponsive and shall be rejected by the District § 7028.15(e). In all contracts where federal funds are involved, no bid submitted shall be invalidated by the failure of the bidder to be licensed in accordance with California law. However, at the time the contract is awarded, the contractor shall be properly licensed.

The Undersigned bidder hereby represents as follows:

1. That no Board member, officer agent, or employee of the City of Carlsbad is personally interested, directly or indirectly, in this Contract, or the compensation to be paid hereunder; that no representation, oral or in writing, of the Board of Directors, its officers, agents, or employees has inducted him/her to enter into this Contract, excepting only those contained in this form of Contract and the papers made a part hereof by its terms; and

2. That this bid is made without connection with any person, firm, or corporation making a bid for the same work, and is in all respects fair and without collusion or fraud.

Accompanying this proposal is _____(Cash, Certified Check, Bond or Cashier's Check) for ten percent (10%) of the amount bid.

The Undersigned is aware of the provisions of section 3700 of the Labor Code which requires every employer to be insured against liability for workers' compensation or to undertake self-insurance in accordance with the provisions of that code and agrees to comply with such provisions before commencing the performance of the work of this Contract and continue to comply until the contract is complete.

The Undersigned is aware of the provisions of the Labor Code, Part 7, Chapter 1, Article 2, relative to the general prevailing rate of wages for each craft or type of worker needed to execute the Contract and agrees to comply with its provisions.

IF A SOLE OWNER OR SOLE CONTRACTOR SIGN HERE:

(1) Name under which business is conducted _____

(2) Signature (given and surname) of proprietor _____

(3) Place of Business _____
(Street and Number)

City and State _____

(4) Zip Code _____ Telephone No. _____

(5) E-Mail _____

IF A PARTNERSHIP, SIGN HERE:

(1) Name under which business is conducted_____

(2) Signature (given and surname and character of partner) (Note: Signature must be made by a general partner)

_____

_____

(3) Place of Business _____
(Street and Number)

City and State _____

(4) Zip Code _____ Telephone No. _____

(5) E-Mail _____

IF A CORPORATION, SIGN HERE:

(1) Name under which business is conducted _____

_____

(2)

_____
(Signature)

_____
(Title)

Impress Corporate Seal here

(3) Incorporated under the laws of the State of _____

(4) Place of Business _____
(Street and Number)

City and State _____

(5) Zip Code _____ Telephone No. _____

(6) E-Mail _____

NOTARIAL ACKNOWLEDGMENT OF EXECUTION BY ALL SIGNATORIES MUST BE ATTACHED

List below names of president, vice president, secretary and assistant secretary, if a corporation; if a partnership, list names of all general partners, and managing partners:

_____	_____
_____	_____
_____	_____
_____	_____
_____	_____
_____	_____
_____	_____
_____	_____

BID SECURITY FORM

(Check to Accompany Bid)

VALVE REPLACEMENT PHASE II
CONTRACT NO. 5019-E

(NOTE: The following form shall be used if check accompanies bid.)

Accompanying this proposal is a *Certified *Cashiers check payable to the order of CARLSBAD MUNICIPAL WATER DISTRICT, in the sum of _____

_____ dollars ($_____), this amount being ten percent (10%) of the total amount of the bid. The proceeds of this check shall become the property of the District, provided this proposal shall be accepted by the District through action of its legally constituted contracting authorities and the undersigned shall fail to execute a contract and furnish the required Performance, Warranty and Payment Bonds and proof of insurance coverage within the stipulated time; otherwise, the check shall be returned to the undersigned. The proceeds of this check shall also become the property of the District if the undersigned shall withdraw his or her bid within the period of fifteen (15) days after the date set for the opening thereof, unless otherwise required by law, and notwithstanding the award of the contract to another bidder.

_____

_____
BIDDER

*Delete the inapplicable word.

(NOTE: If the Bidder desires to use a bond instead of check, the Bid Bond form on the following pages shall be executed--the sum of this bond shall be not less than ten percent (10%) of the total amount of the bid.)

BIDDER'S BOND TO ACCOMPANY PROPOSAL

VALVE REPLACEMENT PHASE II
CONTRACT NO. 5019-E

KNOW ALL PERSONS BY THESE PRESENTS:

That we, _____, as Principal, and _____, as Surety are held and firmly bound unto the Carlsbad Municipal Water District, California, in an amount as follows: (must be at least ten percent (10%) of the bid amount) _____ for which payment, well and truly made, we bind ourselves, our heirs, executors and administrators, successors or assigns, jointly and severally, firmly by these presents.

THE CONDITION OF THE FOREGOING OBLIGATION IS SUCH that if the proposal of the above-bounden Principal for:

VALVE REPLACEMENT PHASE II
CONTRACT NO. 5019-E

in the City of Carlsbad, is accepted by the Board of Directors, and if the Principal shall duly enter into and execute a Contract including required bonds and insurance policies within twenty (20) days from the date of award of Contract by the Board of Directors of the Carlsbad Municipal Water District of the City of Carlsbad, being duly notified of said award, then this obligation shall become null and void; otherwise, it shall be and remain in full force and effect, and the amount specified herein shall be forfeited to the said District.
In the event Principal executed this bond as an individual, it is agreed that the death of Principal shall not exonerate the Surety from its obligations under this bond.

SIGNED AND SEALED, this _____ day of _____, 20_____

_____(SEAL) _____(SEAL)
(Principal) (Surety)

By: _____ By: _____
(Signature) (Signature)

_____ _____
(Print Name/Title) (Print Name/Title)

(SEAL AND NOTARIAL ACKNOWLEDGEMENT OF SURETY – ATTACH ATTORNEY-IN-FACT CERTIFICATE)

APPROVED AS TO FORM:

CELIA A. BREWER
General Counsel

By: _____
Deputy General Counsel

GUIDE FOR COMPLETING
THE "DESIGNATION OF SUBCONTRACTORS" FORM

REFERENCES Prior to preparation of the following "Subcontractor Disclosure Form" Bidders are urged to review the definitions in section 1-2 of the General Provisions to this Contract, especially, "Bid", "Bidder", "Contract", "Contractor", "Contract Price", "Contract Unit Price", "Engineer", "Own Organization", "Subcontractor", and "Work". Bidders are further urged to review sections 2-3 SUBCONTRACTS of the General Provisions.

CAUTIONS This form will be used by the Agency to determine the percentage of work that the Bidder proposes to perform. Bidders are cautioned that failure to provide complete and correct information may result in rejection of the bid as non-responsive. Any bid that proposes performance of more than 50 percent of the work by subcontractors or otherwise to be performed by forces other than the Bidder's own organization will be rejected as non-responsive. Specialty items of work that may be so designated by the Engineer on the "Contractor's Proposal" are not included in computing the percentage of work proposed to be performed by the Bidder.

INSTRUCTIONS The Bidder shall set forth the name and location of business of each and every subcontractor whom the Bidder proposes to perform work or labor or render service in or about the work or improvement, and every subcontractor licensed as a contractor by the State of California whom the Bidder proposes to specially fabricate and install any portion of the work or improvement according to detailed drawings contained in the plans and specifications in excess of one-half of one percent (0.5%) of the Bidder's total bid or, in the case of bids or offers for the construction of streets and highways, including bridges, in excess of one-half of one percent (0.5%) or ten thousand dollars ($10,000) whichever is greater. Said name(s) and location(s) of business of subcontractor(s) shall be set forth and included as an integral part of the bid offer.

The Designation of Subcontractors form must be submitted as a part of the Bidder's sealed bid. Failure to provide complete and correct information may result in rejection of the bid as non-responsive.

Suppliers of materials from sources outside the limits of work are not subcontractors. The value of materials and transport of materials from sources outside the limits of work, as shown on the plans, shall be assigned to the Contractor or the Subcontractor as the case may be, that the Bidder proposes as installer of said materials. The value of material incorporated in any Subcontractor-installed bid item that is supplied by the Bidder shall be included as a part of the work that the Bidder proposes to be performed by the Subcontractor installing said item.

When a Subcontractor has a Carlsbad business license, the number must be entered on the proper form. If the Subcontractor does not have a valid business license, enter "NONE" in the appropriate space.

When the Bidder proposes using a Subcontractor to construct or install less than 100 percent of a bid item, the Bidder shall attach an explanation sheet to the Designation of Subcontractor form. The explanation sheet shall clearly apprise the District of the specific facts that show the Bidder proposes to perform no less than fifty percent (50%) of the work with its own forces.

Determination of the subcontract amounts for purposes of award of the contract shall be determined by the Board of Directors in conformance with the provisions of the contract documents and the various supplemental provisions. The decision of the Board of Directors shall be final.

Contractor is prohibited from performing any work on this project with a subcontractor who is ineligible to perform work on a public works project pursuant to Labor Code Sections 1771.1 or 1777.7.

Bidders shall make any additional copies of the disclosure forms as may be necessary to provide the required information. The page number and total number of additional form pages shall be entered in the location provided on each type of form so duplicated.

DESIGNATION OF SUBCONTRACTOR AND AMOUNT OF SUBCONTRACTOR'S BID ITEMS

(To Accompany Proposal)

VALVE REPLACEMENT PHASE II
CONTRACT NO. 5019-E

The Bidder certifies that it has used the sub-bid of the following listed subcontractors in preparing this bid for the Work and that the listed subcontractors will be used to perform the portions of the Work as designated in this list in accordance with applicable provisions of the specifications and section 4100 et seq. of the Public Contract Code, "Subletting and Subcontracting Fair Practices Act." The Bidder further certifies that no additional subcontractor will be allowed to perform any portion of the Work in excess of one-half of one percent (0.5%) of the Bidder's total bid, or in the case of bids or offers for construction of streets and highways, including bridges, in excess of one-half of one percent (0.5%) or ten thousand dollars ($10,000), whichever is greater, and that no changes in the subcontractors listed work will be made except upon the prior approval of the Agency.

SUBCONTRACTOR'S BID ITEMS

Portion of Work	Subcontractor Name and Location of Business	Phone No. and Email Address	DIR Registration No.	Subcontractor's License No. and Classification	Amount of Work by Subcontractor in Dollars*

Page _____ of _____ pages of this Subcontractor Designation form

* Pursuant to section 4104 (a)(3)(A) California Public Contract Code, receipt of the information preceded by an asterisk may be submitted by the Bidder up to 24 hours after the deadline for submitting bids contained in the "Notice Inviting Bids."

BIDDER'S STATEMENT OF TECHNICAL ABILITY AND EXPERIENCE

(To Accompany Proposal)

VALVE REPLACEMENT PHASE II
CONTRACT NO. 5019-E

The Bidder is required to state what work of a similar character to that included in the proposed Contract he/she has successfully performed and give references, with telephone numbers, which will enable the City to judge his/her responsibility, experience and skill. An attachment can be used.

Date Contract Completed	Name and Address of the Employer	Name and Phone No. of Person to Contract	Type of Work	Amount of Contract

BIDDER'S CERTIFICATE OF INSURANCE FOR GENERAL LIABILITY, EMPLOYERS' LIABILITY, AUTOMOTIVE LIABILITY AND WORKERS' COMPENSATION

(To Accompany Proposal)

VALVE REPLACEMENT PHASE II
CONTRACT NO. 5019-E

As a required part of the Bidder's proposal the Bidder must attach either of the following to this page.

1) Certificates of insurance showing conformance with the requirements herein for each of:

    - ☐ Comprehensive General Liability
    - ☐ Automobile Liability
    - ☐ Workers Compensation
    - ☐ Employer's Liability

2) Statement with an insurance carrier's notarized signature stating that the carrier can, and upon payment of fees and/or premiums by the Bidder, will issue to the Bidder Policies of insurance for Comprehensive General Liability, Automobile Liability, Workers Compensation and Employer's Liability in conformance with the requirements herein and Certificates of insurance to the Agency showing conformance with the requirements herein.

All certificates of insurance and statements of willingness to issue insurance for auto policies offered to meet the specification of this contract must:

1) Meet the conditions stated in The Notice Inviting Bids and the General Provisions for this project for each insurance company that the Contractor proposes.

2) Cover <u>any vehicle</u> used in the performance of the contract, used onsite or offsite, whether owned, non-owned or hired, and whether scheduled or non-scheduled.

BIDDER'S STATEMENT RE DEBARMENT

(To Accompany Proposal)

VALVE REPLACEMENT PHASE II
CONTRACT NO. 5019-E

1) Have you or any of your subcontractors ever been debarred as an irresponsible bidder by another jurisdiction in the State of California?

_____ yes _____ no

2) If yes, what was/were the name(s) of the agency(ies) and what was/were the period(s) of debarment(s)? Attach additional copies of this page to accommodate more than two debarments.

_____	_____
party debarred	party debarred
_____	_____
agency	agency
_____	_____
period of debarment	period of debarment

BY CONTRACTOR:

_____
(name of Contractor)

By: _____
(sign here)

_____
(print name/title)

Page _____ of _____ pages of this Re Debarment form

BIDDER'S DISCLOSURE OF DISCIPLINE RECORD

(To Accompany Proposal)

VALVE REPLACEMENT PHASE II
CONTRACT NO. 5019-E

Contractors are required by law to be licensed and regulated by the Contractors' State License Board which has jurisdiction to investigate complaints against contractors if a complaint regarding a patent act or omission is filed within four years of the date of the alleged violation. A complaint regarding a latent act or omission pertaining to structural defects must be filed within 10 years of the date of the alleged violation. Any questions concerning a contractor may be referred to the Registrar, Contractors' State License board, P.O. Box 26000, Sacramento, California 95826.

1) Have you ever had your contractor's license suspended or revoked by the California Contractors' State license Board two or more times within an eight year period?

   _____ yes _____ no

2) Has the suspension or revocation of your contractor's license ever been stayed?

   _____ yes _____ no

3) Have any subcontractors that you propose to perform any portion of the Work ever had their contractor's license suspended or revoked by the California Contractors' State license Board two or more times within an eight year period?

   _____ yes _____ no

4) Has the suspension or revocation of the license of any subcontractor's that you propose to perform any portion of the Work ever been stayed?

   _____ yes _____ no

5) If the answer to either of 1. or 3. above is yes fully identify, in each and every case, the party disciplined, the date of and violation that the disciplinary action pertain to, describe the nature of the violation and the disciplinary action taken therefore.

_____

_____

_____

_____

_____

(If needed attach additional sheets to provide full disclosure.)

Page _____ of _____ pages of this Disclosure of Discipline form

BIDDER'S DISCLOSURE OF DISCIPLINE RECORD

(CONTINUED)

(To Accompany Proposal)

VALVE REPLACEMENT PHASE II
CONTRACT NO. 5019-E

6) If the answer to either of 2. or 4. above is yes fully identify, in each and every case, the party who's discipline was stayed, the date of the violation that the disciplinary action pertains to, describe the nature of the violation and the condition (if any) upon which the disciplinary action was stayed.

_____

_____

_____

_____

_____

_____

_____

_____

_____

_____

_____

_____

_____

_____

_____

(If needed attach additional sheets to provide full disclosure.)

BY CONTRACTOR:

_____
(name of Contractor)

By: _____
(sign here)

_____
(print name/title)

Page _____ of _____ pages of this Disclosure of Discipline form

NONCOLLUSION DECLARATION TO BE EXECUTED BY BIDDER AND SUBMITTED WITH BID

PUBLIC CONTRACT CODE SECTION 7106

VALVE REPLACEMENT PHASE II
CONTRACT NO. 5019-E

The undersigned declares:

I am the _____ of _____, the party making the foregoing bid.

The bid is not made in the interest of, or on behalf of, any undisclosed person, partnership, company, association, organization, or corporation. The bid is genuine and not collusive or sham. The bidder has not directly or indirectly induced or solicited any other bidder to put in a false or sham bid. The bidder has not directly or indirectly colluded, conspired, connived, or agreed with any bidder or anyone else to put in a sham bid, or to refrain from bidding. The bidder has not in any manner, directly or indirectly, sought by agreement, communication, or conference with anyone to fix the bid price of the bidder or any other bidder, or to fix any overhead, profit, or cost element of the bid price, or of that of any other bidder. All statements contained in the bid are true. The bidder has not, directly or indirectly, submitted his or her bid price or any breakdown thereof, or the contents thereof, or divulged information or data relative thereto, to any corporation, partnership, company, association, organization, bid depository, or to any member or agent thereof, to effectuate a collusive or sham bid, and has not paid, and will not pay, any person or entity for such purpose.

Any person executing this declaration on behalf of a bidder that is a corporation, partnership, joint venture, limited liability company, limited liability partnership, or any other entity, hereby represents that he or she has full power to execute, and does execute, this declaration on behalf of the bidder.

I declare under penalty of perjury under the laws of the State of California that the foregoing is true and correct and that this declaration is executed on _____, 20____ at _____ [city], _____ [state].

_____
Signature of Bidder

CONTRACT
PUBLIC WORKS

This agreement is made this _____ day of _____, 20___, by and between the Carlsbad Municipal Water District of the City of Carlsbad, California, a municipal corporation, (hereinafter called "District"), and _____ whose principal place of business is _____ (hereinafter called "Contractor").

District and Contractor agree as follows:

1. Description of Work. Contractor shall perform all work specified in the Contract documents for:

VALVE REPLACEMENT PHASE II
CONTRACT NO. 5019-E

(hereinafter called "project")

2. Provisions of Labor and Materials. Contractor shall provide all labor, materials, tools, equipment, and personnel to perform the work specified by the Contract Documents.

3. Contract Documents. The Contract Documents consist of this Contract, Notice Inviting Bids, Contractor's Proposal, Bidder's Bond, Noncollusion Declaration, Designation of Subcontractors, Technical Ability and Experience, Bidder's Statement Re Debarment, Escrow Agreement, Release Form, the Plans and Specifications, the General Provisions, addendum(s) to said Plans and Specifications and General Provisions, and all proper amendments and changes made thereto in accordance with this Contract or the Plans and Specifications, and all bonds for the project; all of which are incorporated herein by this reference.

Contractor, her/his subcontractors, and materials suppliers shall provide and install the work as indicated, specified, and implied by the Contract Documents. Any items of work not indicated or specified, but which are essential to the completion of the work, shall be provided at the Contractor's expense to fulfill the intent of said documents. In all instances through the life of the Contract, the District will be the interpreter of the intent of the Contract Documents, and the District's decision relative to said intent will be final and binding. Failure of the Contractor to apprise subcontractors and materials suppliers of this condition of the Contract will not relieve responsibility of compliance.

4. Payment. For all compensation for Contractor's performance of work under this Contract, District shall make payment to the Contractor per section 9-3 PAYMENT of the General Provisions section of this contract. The Engineer will close the estimate of work completed for progress payments on the last working day of each month. The District shall withhold retention as required by Public Contract Code Section 9203.

5. Independent Investigation. Contractor has made an independent investigation of the jobsite, the soil conditions at the jobsite, and all other conditions that might affect the progress of the work and is aware of those conditions. The Contract price includes payment for all work that

may be done by Contractor, whether anticipated or not, in order to overcome underground conditions. Any information that may have been furnished to Contractor by District about underground conditions or other job conditions is for Contractor's convenience only, and District does not warrant that the conditions are as thus indicated. Contractor is satisfied with all job conditions, including underground conditions and has not relied on information furnished by District.

6. Hazardous Waste or Other Unusual Conditions. If the contract involves digging trenches or other excavations that extend deeper than four feet below the surface Contractor shall promptly, and before the following conditions are disturbed, notify District, in writing, of any:

A. Hazardous Waste. Material that Contractor believes may be material that is hazardous waste, as defined in section 25117 of the Health and Safety Code, that is required to be removed to a Class I, Class II, or Class III disposal site in accordance with provisions of existing law.

B. Differing Conditions. Subsurface or latent physical conditions at the site differing from those indicated.

C. Unknown Physical Conditions. Unknown physical conditions at the site of any unusual nature, different materially from those ordinarily encountered and generally recognized as inherent in work of the character provided for in the contract.

District shall promptly investigate the conditions, and if it finds that the conditions do materially so differ, or do involve hazardous waste, and cause a decrease or increase in contractor's costs of, or the time required for, performance of any part of the work shall issue a change order under the procedures described in this contract.

In the event that a dispute arises between District and Contractor whether the conditions materially differ, or involve hazardous waste, or cause a decrease or increase in the contractor's cost of, or time required for, performance of any part of the work, contractor shall not be excused from any scheduled completion date provided for by the contract, but shall proceed with all work to be performed under the contract. Contractor shall retain any and all rights provided either by contract or by law which pertain to the resolution of disputes and protests between the contracting parties.

7. Immigration Reform and Control Act. Contractor certifies it is aware of the requirements of the Immigration Reform and Control Act of 1986 (8 USC sections 1101-1525) and has complied and will comply with these requirements, including, but not limited to, verifying the eligibility for employment of all agents, employees, subcontractors, and consultants that are included in this Contract.

8. Prevailing Wage. Pursuant to the California Labor Code, the director of the Department of Industrial Relations has determined the general prevailing rate of per diem wages in accordance with California Labor Code, section 1773 and a copy of a schedule of said general prevailing wage rates is on file in the office of the City Engineer and is incorporated by reference herein. Pursuant to California Labor Code, section 1775, Contractor shall pay prevailing wages. Contractor shall post copies of all applicable prevailing wages on the job site. Contractor shall comply with California Labor Code, section 1776, which generally requires keeping accurate payroll records, verifying and certifying payroll records, and making them available for inspection. Contractor shall require all subcontractors to comply with Section 1776.

9. Indemnification. Contractor shall assume the defense of, pay all expenses of defense, and indemnify and hold harmless the District, and its officers and employees, from all claims, loss, damage, injury and liability of every kind, nature and description, directly or indirectly arising from or in connection with the performance of the Contract or work; or from any failure or alleged failure of Contractor to comply with any applicable law, rules or regulations including those relating to safety and health; and from any and all claims, loss, damages, injury and liability, howsoever the same may be caused, resulting directly or indirectly from the nature of the work covered by the Contract, except for loss or damage caused by the sole or active negligence or willful misconduct of the District. The expenses of defense include all costs and expenses including attorneys' fees for litigation, arbitration, or other dispute resolution method.

Contractor shall also defend and indemnify the District against any challenges to the award of the contract to Contractor, and Contractor will pay all costs, including defense costs for the District. Defense costs include the cost of separate counsel for District, if District requests separate counsel.

Contractor shall also defend and indemnify the District against any challenges to the award of the contract to Contractor, arising in whole or in part from alleged inaccuracies or misrepresentation by the Contractor, whether intentional or otherwise, and Contractor will pay all costs, including defense costs for the District. Defense costs include the cost of separate counsel for District, if District requests separate counsel.

10. Insurance. Contractor shall procure and maintain for the duration of the contract insurance against claims for injuries to persons or damage to property which may arise from or in connection with the performance of the work hereunder by the Contractor, his or her agents, representatives, employees or subcontractors. Said insurance shall meet the City of Carlsbad's policy for insurance as stated in City Council Policy # 70.

(A) Coverages and Limits Contractor shall maintain the types of coverages and minimum limits indicted herein:

a. **Commercial General Liability (GLC) Insurance**: Insurance written on an "occurrence" basis, including products-completed operations, personal & advertising injury, with limits no less than **$2,000,000** per occurrence. If a general aggregate limit applies, either the general aggregate limit shall apply separately to this project/location or the general aggregate limit shall be twice the required occurrence limit

b. **Business Automobile Liability Insurance**: $2,000,000 combined single limit per accident for bodily injury and property damage. In addition, the auto policy must cover any vehicle used in the performance of the contract, used onsite or offsite, whether owned, non-owned or hired, and whether scheduled or non-scheduled.

c. **Workers' Compensation and Employers' Liability Insurance:** Workers' compensation limits as required by the Labor Code of the State of California and Employers' Liability limits of $1,000,000 per incident. Workers' compensation offered by the State Compensation Insurance Fund is acceptable to the District.

(B) Additional Provisions: Contractor shall ensure that the policies of insurance required under this agreement with the exception of Workers' Compensation and Business Automobile Liability Insurance contain, or are endorsed to contain, the following provisions.

a. The District, its officials, employees and volunteers are to be covered as additional insured as respects: liability arising out of activities performed by or on behalf of the Contractor; products and completed operations of the contractor; premises owned, leased, hired or borrowed by the contractor. The coverage shall contain no special limitations on the scope of protection afforded to the District, its officials, employees or volunteers. All additional insured endorsements must be evidenced using separate documents attached to the certificate of insurance; one for each company affording general liability, and employers' liability coverage.

b. The Contractor's insurance coverage shall be primary insurance as respects the District, its officials, employees and volunteers. Any insurance or self-insurance maintained by the District, its officials, employees or volunteers shall be in excess of the contractor's insurance and shall not contribute with it.

c. Any failure to comply with reporting provisions of the policies shall not affect coverage provided to the District, its officials, employees or volunteers.

d. Coverage shall state that the contractor's insurance shall apply separately to each insured against whom claim is made or suit is brought, except with respect to the limits of the insurer's liability.

(C) Notice of Cancellation. Each insurance policy required by this agreement shall be endorsed to state that coverage shall not be nonrenewed, suspended, voided, canceled, or reduced in coverage or limits except after ten (10) days' prior written notice has been sent to the District by certified mail, return receipt requested.

(D) Deductibles and Self-Insured Retention (S.I.R.) Levels. Any deductibles or self-insured retention levels must be declared to and approved by the District. At the option of the District, either: the insurer shall reduce or eliminate such deductibles or self-insured retention levels as respects the District, its officials and employees; or the contractor shall procure a bond guaranteeing payment of losses and related investigation, claim administration and defense expenses.

(E) Waiver of Subrogation. All policies of insurance required under this agreement shall contain a waiver of all rights of subrogation the insurer may have or may acquire against the District or any of its officials or employees.

(F) Subcontractors. Contractor shall include all subcontractors as insured under its policies or shall furnish separate certificates and endorsements for each subcontractor. Coverages for subcontractors shall be subject to all of the requirements stated herein.

(G) Acceptability of Insurers. Insurance is to be placed with insurers that have a rating in Best's Key Rating Guide of at least A-:VII. Insurers must also be authorized to transact the business of insurance by the State of California Insurance Commissioner as admitted carriers as evidenced by a listing in the official publication of the Department of Insurance of the State of California and/or under the standards specified by City Council Policy # 70.

(H) Verification of Coverage. Contractor shall furnish the District with certificates of insurance and original endorsements affecting coverage required by this clause. The certificates and endorsements for each insurance policy are to be signed by a person authorized by that insurer to bind coverage on its behalf. The certificates and endorsements are to be in forms approved by the District and are to be received and approved by the District before the Contract is executed by the District.

(I) Cost of Insurance. The Cost of all insurance required under this agreement shall be included in the Contractor's bid.

11. Claims and Lawsuits. All claims by Contractor shall be resolved in accordance with Public Contract Code section 9204, which is incorporated by reference. A copy of Section 9204 is included in Section 3 of the General Provisions. In addition, all claims by Contractor for $375,000 or less shall be resolved in accordance with the provisions in the Public Contract Code, Division 2, Part 3, Chapter 1, Article 1.5 (commencing with section 20104) which are incorporated by reference. A copy of Article 1.5 is included in Section 3 of the General Provisions. In the event of a conflict between Section 9204 and Article 1.5, Section 9204 shall apply. Notwithstanding the provisions of this section of the contract, all claims shall comply with the Government Tort Claim Act (section 900 et seq., of the California Government Code) for any claim or cause of action for money or damages prior to filing any lawsuit for breach of this agreement.

(A) Assertion of Claims. Contractor hereby agrees that any contract claim submitted to the District must be asserted as part of the contract process as set forth in this agreement and not in anticipation of litigation or in conjunction with litigation.

(B) False Claims. Contractor acknowledges that if a false claim is submitted to the District, it may be considered fraud and the Contractor may be subject to criminal prosecution.

(C) Government Code. Contractor acknowledges that California Government Code sections 12650 et seq., the False Claims Act, provides for civil penalties where a person knowingly submits a false claim to a public entity. These provisions include false claims made with deliberate ignorance of the false information or in reckless disregard of the truth or falsity of the information.

(D) Penalty Recovery. If the Carlsbad Municipal Water District seeks to recover penalties pursuant to the False Claims Act, it is entitled to recover its litigation costs, including attorney's fees.

(E) Debarment for False Claims. Contractor hereby acknowledges that the filing of a false claim may subject the Contractor to an administrative debarment proceeding wherein the Contractor may be prevented from further bidding on public contracts for a period of up to five years.

(F) Carlsbad Municipal Code. The provisions of Carlsbad Municipal Code sections 3.32.025, 3.32.026, 3.32.027 and 3.32.028 pertaining to false claims are incorporated herein by reference.

(G) Debarment from Other Jurisdictions. Contractor hereby acknowledges that debarment by another jurisdiction is grounds for the Board of Directors of the Carlsbad Municipal Water District of the City of Carlsbad to disqualify the Contractor or subcontractor from participating in future contract bidding.

(H) Jurisdiction. Contractor agrees and hereby stipulates that the proper venue and jurisdiction for resolution of any disputes between the parties arising out of this agreement is San Diego County, California.

I have read and understand all provisions of Section 11 above. _____ init _____ init

12. Maintenance of Records. Contractor shall maintain and make available at no cost to the District, upon request, records in accordance with sections 1776 and 1812 of Part 7, Chapter 1,

Article 2, of the Labor Code. If the Contractor does not maintain the records at Contractor's principal place of business as specified above, Contractor shall so inform the District by certified letter accompanying the return of this Contract. Contractor shall notify the District by certified mail of any change of address of such records.

13. Labor Code Provisions. The provisions of Part 7, Chapter 1, commencing with section 1720 of the Labor Code are incorporated herein by reference.

14. Security. Securities in the form of cash, cashier's check, or certified check may be substituted for any monies withheld by the District to secure performance of this contract for any obligation established by this contract. Any other security that is mutually agreed to by the Contractor and the District may be substituted for monies withheld to ensure performance under this Contract.

15. Unfair Business Practices. In entering into a public works contract or a subcontract to supply goods, services, or materials pursuant to a public works contract, the contractor or subcontractor offers and agrees to assign to the awarding body all rights, title, and interest in and to all causes of action it may have under Section 4 of the Clayton Act (15 U.S.C. Sec. 15) or under the Cartwright Act (Chapter 2 (commencing with Section 16700) of Part 2 of Division 7 of the Business and Professions Code), arising from purchases of goods, services, or materials pursuant to the public works contract or the subcontract. This assignment shall be made and become effective at the time the awarding body tenders final payment to the contractor, without further acknowledgment by the parties.

16. Provisions Required by Law Deemed Inserted. Each and every provision of law and clause required by law to be inserted in this Contract shall be deemed to be inserted herein and included herein, and if, through mistake or otherwise, any such provision is not inserted, or is not correctly inserted, then upon application of either party, the Contract shall forthwith be physically amended to make such insertion or correction.

///

///

///

///

///

///

///

///

///

///

///

17. Additional Provisions. Any additional provisions of this agreement are set forth in the "General Provisions" or "Supplemental Provisions" attached hereto and made a part hereof.

NOTARIAL ACKNOWLEDGMENT OF EXECUTION BY ALL SIGNATORIES MUST BE ATTACHED

(CORPORATE SEAL)

CONTRACTOR:

_____
(name of Contractor)

By: _____
(sign here)

_____
(print name and title)

By: _____
(sign here)

_____
(print name and title)

CARLSBAD MUNICIPAL WATER DISTRICT, a municipal corporation of the State of California

By:
_____
MATT HALL
President

ATTEST:

_____
BARBARA ENGLESON
Secretary

President or vice-president **and** secretary or assistant secretary must sign for corporations. If only one officer signs, the corporation must attach a resolution certified by the secretary or assistant secretary under the corporate seal empowering that officer to bind the corporation.

APPROVED AS TO FORM:

CELIA A. BREWER
General Counsel

By: _____
Deputy General Counsel

LABOR AND MATERIALS BOND

Board of Directors of the Carlsbad Municipal Water District located in the State of California has awarded to _____
(hereinafter designated as the "Principal"), a Contract for:

VALVE REPLACEMENT PHASE II
CONTRACT NO. 5019-E

in the City of Carlsbad, in strict conformity with the drawings and specifications, and other Contract Documents now on file in the Office of the Secretary of the Carlsbad Municipal Water District and all of which are incorporated herein by this reference.

WHEREAS, Principal has executed or is about to execute said Contract and the terms thereof require the furnishing of a bond, providing that if Principal or any of their subcontractors shall fail to pay for any materials, provisions, provender or other supplies or teams used in, upon or about the performance of the work agreed to be done, or for any work or labor done thereon of any kind, the Surety on this bond will pay the same to the extent hereinafter set forth.

NOW, THEREFORE, WE, _____,
as Principal, (hereinafter designated as the "Contractor"), and _____
_____ as Surety, are held firmly bound unto the Carlsbad Municipal Water District in the sum of _____
_____ Dollars ($_____),
said sum being an amount equal to: One hundred percent (100%) of the total amount payable under the terms of the contract by the Carlsbad Municipal Water District, and for which payment well and truly to be made we bind ourselves, our heirs, executors and administrators, successors, or assigns, jointly and severally, firmly by these presents.

THE CONDITION OF THIS OBLIGATION IS SUCH that if the Contractor or his/her subcontractors fail to pay for any materials, provisions, provender, supplies, or teams used in, upon, for, or about the performance of the work contracted to be done, or for any other work or labor thereon of any kind, consistent with California Civil Code section 9100, or for amounts due under the Unemployment Insurance Code with respect to the work or labor performed under this Contract, or for any amounts required to be deducted, withheld, and paid over to the Employment Development Department from the wages of employees of the contractor and subcontractors pursuant to section 13020 of the Unemployment Insurance Code with respect to the work and labor**,** that the Surety will pay for the same, and, also, in case suit is brought upon the bond, reasonable attorney's fees, to be fixed by the court consistent with California Civil Code section 9554.

This bond shall inure to the benefit of any of the persons named in California Civil Code section 9100, so as to give a right of action to those persons or their assigns in any suit brought upon the bond.

Surety stipulates and agrees that no change, extension of time, alteration or addition to the terms of the Contract, or to the work to be performed hereunder or the specifications accompanying the same shall affect its obligations on this bond, and it does hereby waive notice of any change, extension of time, alterations or addition to the terms of the contract or to the work or to the specifications.

In the event that Contractor is an individual, it is agreed that the death of any such Contractor shall not exonerate the Surety from its obligations under this bond.

SIGNED AND SEALED, this _____ day of _____, 20____

_____(SEAL)
(Principal)

_____(SEAL)
(Surety)

By: _____
(Signature)

By: _____
(Signature)

_____
(Print Name & Title)

_____
(Print Name & Title)

(SEAL AND NOTARIAL ACKNOWLEDGEMENT OF SURETY – ATTACH ATTORNEY-IN-FACT CERTIFICATE)

APPROVED AS TO FORM:

CELIA A. BREWER
General Counsel

By: _____
Deputy General Counsel

FAITHFUL PERFORMANCE/WARRANTY BOND

Board of Directors of the Carlsbad Municipal Water District located in the State of California, has awarded to _____, (hereinafter designated as the "Principal"), a Contract for:

VALVE REPLACEMENT PHASE II
CONTRACT NO. 5019-E

in the City of Carlsbad, in strict conformity with the contract, the drawings and specifications, and other Contract Documents now on file in the Office of the Secretary of the Carlsbad Municipal Water District, all of which are incorporated herein by this reference.

WHEREAS, Principal has executed or is about to execute said Contract and the terms thereof require the furnishing of a bond for the faithful performance and warranty of said Contract;

NOW, THEREFORE, WE, _____, as Principal, (hereinafter designated as the "Contractor"), and _____ _____ as Surety, are held firmly bound unto the Carlsbad Municipal Water District in the sum of _____ _____ Dollars ($_____), said sum being an amount equal to: One hundred percent (100%) of the total amount payable under the terms of the contract by the Carlsbad Municipal Water District, and for which payment well and truly to be made we bind ourselves, our heirs, executors and administrators, successors, or assigns, jointly and severally, firmly by these presents.

THE CONDITION OF THIS OBLIGATION IS SUCH that if the above bounden Contractor, their heirs, executors, administrators, successors or assigns, shall in all things stand to and abide by, and well and truly keep and perform the covenants, conditions, and agreements in the Contract and any alteration thereof made as therein provided on their part, to be kept and performed at the time and in the manner therein specified, and in all respects according to their true intent and meaning, and shall indemnify and save harmless the Carlsbad Municipal Water District, its officers, employees and agents, as therein stipulated, then this obligation shall become null and void; otherwise it shall remain in full force and effect.

As a part of the obligation secured hereby and in addition to the face amount specified therefore, there shall be included costs and reasonable expenses and fees, including reasonable attorney's fees, incurred by the District in successfully enforcing such obligation, all to be taxed as costs and included in any judgment rendered.

Surety stipulates and agrees that no change, extension of time, alteration or addition to the terms of the Contract, or to the work to be performed there under or the specifications accompanying the same shall affect its obligations on this bond, and it does hereby waive notice of any change, extension of time, alterations or addition to the terms of the contract or to the work or to the specifications.

In the event that Contractor is an individual, it is agreed that the death of any such Contractor shall not exonerate the Surety from its obligations under this bond.

SIGNED AND SEALED, this _____ day of _____, 20____

_____(SEAL)
(Principal)

_____(SEAL)
(Surety)

By: _____
(Signature)

By: _____
(Signature)

_____
(Print Name & Title)

_____
(Print Name & Title)

(SEAL AND NOTARIAL ACKNOWLEDGEMENT OF SURETY – ATTACH ATTORNEY-IN-FACT CERTIFICATE)

APPROVED AS TO FORM:

CELIA A. BREWER
General Counsel

By: _____
Deputy General Counsel

OPTIONAL ESCROW AGREEMENT FOR SECURITY DEPOSITS IN LIEU OF RETENTION

This Escrow Agreement is made and entered into by and between the Carlsbad Municipal Water District whose address is 5950 El Camino Real, Carlsbad, California, 92008, hereinafter called "District" and _____ whose address is _____ hereinafter called "Contractor" and _____ whose address is _____ hereinafter called "Escrow Agent."

For the consideration hereinafter set forth, the District, Contractor and Escrow Agent agree as follows:

1. Pursuant to section 22300 of the Public Contract Code of the State of California, the Contractor has the option to deposit securities with the Escrow Agent as a substitute for retention earnings required to be withheld by the District pursuant to the Construction Contract entered into between the City and Contractor for

VALVE REPLACEMENT PHASE II
CONTRACT NO. 5019-E

in the amount of _____ dated _____ (hereinafter referred to as the "Contract"). Alternatively, on written request of the Contractor, the District shall make payments of the retention earnings directly to the Escrow Agent. When the Contractor deposits the securities as a substitute for Contract earnings, the Escrow Agent shall notify the District within 10 days of the deposit. The market value of the securities at the time of the substitution shall be a least equal to the cash amount then required to be withheld as retention under the terms of the contract between the District and Contractor. Securities shall be held in the name of the District and shall designate the Contractor as the beneficial owner.

2. The District shall make progress payments to the Contractor for such funds which otherwise would be withheld from progress payments pursuant to the Contract provisions, provided that the Escrow Agent holds securities in the form and amount specified above.

3. When the District makes payment of retentions earned directly to the Escrow Agent, the Escrow Agent shall hold them for the benefit of the Contractor until such time as the escrow created under this contract is terminated. The Contractor may direct the investment of the payments into securities. All terms and conditions of this agreement and the rights and responsibilities of the parties shall be equally applicable and binding when the District pays the Escrow Agent directly.

4. The Contractor shall be responsible for paying all fees for the expenses incurred by the Escrow Agent in administering the Escrow Account and all expenses of the District. These expenses and payment terms shall be determined by the District, Contractor and Escrow Agent.

5. The interest earned on the securities or the money market accounts held in escrow and all interest earned on that interest shall be for the sole account of Contractor and shall be subject to withdrawal by Contractor at any time and from time to time without notice to the District.

6. Contractor shall have the right to withdraw all or any part of the principal in the Escrow Account only by written notice to Escrow Agent accompanied by written authorization from District to the Escrow Agent that the District consents to the withdrawal of the amount sought to be withdrawn by Contractor.

7. The District shall have a right to draw upon the securities in the event of default by the Contractor. Upon seven days' written notice to the Escrow Agent from the District of the default, the Escrow Agent shall immediately convert the securities to cash and shall distribute the cash as instructed by the District.

8. Upon receipt of written notification from the City certifying that the Contract is final and complete and that the Contractor has complied with all requirements and procedures applicable to the Contract, the Escrow Agent shall release to Contractor all securities and interest on deposit less escrow fees and charges of the Escrow Account. The escrow shall be closed immediately upon disbursement of all moneys and securities on deposit and payments of fees and charges.

9. The Escrow Agent shall rely on the written notifications from the District and the Contractor pursuant to sections (1) to (8), inclusive, of this agreement and the District and Contractor shall hold Escrow Agent harmless from Escrow Agent's release, conversion and disbursement of the securities and interest as set forth above.

10. The names of the persons who are authorized to give written notices or to receive written notice on behalf of the District and on behalf of Contractor in connection with the foregoing, and exemplars of their respective signatures are as follows:

For District: Title FINANCE DIRECTOR

Name _____

Signature _____

Address 1635 Faraday Avenue, Carlsbad, CA 92008

For Contractor: Title _____

Name _____

Signature _____

Address _____

For Escrow Agent: Title _____

Name _____

Signature _____

Address _____

At the time the Escrow Account is opened, the District and Contractor shall deliver to the Escrow Agent a fully executed counterpart of this Agreement.

IN WITNESS WHEREOF, the parties have executed this Agreement by their proper officers on the date first set forth above.

For District:

Title _____PRESIDENT_____

Name _____

Signature

_____

Address 1200 Carlsbad Village Drive, Carlsbad, CA 92008

For Contractor:

Title _____

Name _____

Signature _____

Address _____

For Escrow Agent:

Title _____

Name _____

Signature _____

Address _____

GENERAL PROVISIONS

GENERAL PROVISIONS
FOR
VALVE REPLACEMENT PHASE II PROJECT
CONTRACT NO. 5019-E

CARLSBAD MUNICIPAL WATER DISTRICT

BIDDERS ARE ADVISED THAT THIS SECTION REPLACES PART 1, GENERAL PROVISIONS, OF THE STANDARD SPECIFICATIONS FOR PUBLIC WORKS CONSTRUCTION

SECTION 1 -- TERMS, DEFINITIONS ABBREVIATIONS AND SYMBOLS

1-1 TERMS – Unless otherwise stated, the words *directed, required, permitted, ordered, instructed, designated, considered necessary, prescribed, approved, acceptable, satisfactory,* or words of like meaning, refer to actions, expressions, and prerogatives of the Engineer.

1-1.1 Reference to Drawings. Where words "shown", "indicated", "detailed", "noted", "scheduled", or words of similar import are used, it shall be understood that reference is made to the plans accompanying these provisions, unless stated otherwise.

1-1.2 Directions. Where words "directed", "designated", "selected", or words of similar import are used, it shall be understood that the direction, designation or selection of the Engineer is intended, unless stated otherwise. The word "required" and words of similar import shall be understood to mean "as required to properly complete the work as required and as approved by the Engineer," unless stated otherwise.

1-1.3 Equals and Approvals. Where the words "equal", "approved equal", "equivalent", and such words of similar import are used, it shall be understood such words are followed by the expression "in the opinion of the Engineer", unless otherwise stated. Where the words "approved", "approval", "acceptance", or words of similar import are used, it shall be understood that the approval, acceptance, or similar import of the Engineer is intended.

1-1.4 Perform. The word "perform" shall be understood to mean that the Contractor, at its expense, shall perform all operations, labor, tools and equipment, and further, including the furnishing and installing of materials that are indicated, specified or required to mean that the Contractor, at its expense, shall furnish and install the work, complete in place and ready to use, including furnishing of necessary labor, materials, tools, equipment, and transportation.

1-2 DEFINITIONS. The following words, or groups of words, shall be exclusively defined by the definitions assigned to them herein.

Addendum – Written or graphic instrument issued prior to the opening of Bids which clarifies, corrects, or changes the bidding or Contract Documents. The term Addendum shall include bulletins and all other types of written notices issued to potential bidders prior to opening of Bids.

Agency – the Carlsbad Municipal Water District (CMWD). CMWD, "District" and the "City" are used interchangeably throughout the Contract.

Agreement – See Contract.

Assessment Act Contract – A Contract financed by special assessments authorized under a State Act or procedural ordinance of a City or County.

Base – A layer of specified material of planned thickness placed immediately below the pavement or surfacing.

Bid – The offer or proposal of the Bidder submitted on the prescribed form setting forth the prices for the Work.

Bidder – Any individual, firm, partnership, corporation, or combination thereof, submitting a Bid for the Work, acting directly or through a duly authorized representative.

Board – The officer or body constituting the awarding authority of the Agency, the Board of Directors of Carlsbad Municipal Water District (CMWD). CMWD and the "City" are used interchangeably throughout the Contract.

Bond – Bid, performance, and payment bond or other instrument of security.

Cash Contract – A Contract financed by means other than special assessments.

Change Order – A written order to the Contractor signed by the Agency directing an addition, deletion, or revision in the Work, or an adjustment in the Contract Price or the Contract time issued after the effective date of the Contract. A Change Order may or may not also be signed by the Contractor.

Code – The terms *Government Code, Labor Code*, etc., refer to codes of the State of California.

Construction Manager– the Project Inspector's immediate supervisor and first level of appeal for informal dispute resolution.

Contract – The written agreement between the Agency and the Contractor covering the Work.

Contract Documents – Including but not limited to; the Contract, any Addendum (which pertain to the contract documents), Notice Inviting Bids, Instructions to Bidders; Bid (including documentation accompanying the Bid and any post-bid documentation submitted prior to the Notice of Award) when attached as an exhibit to the Contract, the Bonds, the General Provisions, permits from other agencies, the Technical Specifications, the Supplemental Provisions, the Plans, Standard Plans, Standard Specifications, Reference Specifications, and all Modifications issued after the execution of the Contract.

Contractor – The individual, partnership, corporation, joint venture, or other legal entity having a Contract with the Agency to perform the Work. In the case of work being done under permit issued

by the Agency, the permittee shall be constructed to be the Contractor. The term “prime contractor” shall mean Contractor.

Contract Price – The total amount of money for which the Contract is awarded.

Contract Unit Price – The amount stated in the Bid for a single unit of an item of work.

County Sealer – The Sealer of Weights and Measures of the county in which the Contract is let.

Days – Days shall mean consecutive calendar’s days unless otherwise specified.

Deputy City Engineer, Construction Management & Inspection – The Construction Manager’s immediate supervisor and second level of appeal for informal dispute resolution.

Dispute Board – persons designated by the City Manager of the City of Carlsbad or Executive Manager of the Carlsbad Municipal Water District, to hear and advise the City Manager on claims submitted by the Contractor. The City Manager for the City of Carlsbad or the Executive Manager for the Carlsbad Municipal Water District is the last appeal level for informal dispute resolution.

Electrolier – Street light assembly complete, including foundation, standard, luminaire arm, luminaire, etc.

Engineer – the City Engineer of the City of Carlsbad or his/her approved representative. CMWD and the “City” are used interchangeably throughout this Contract. The Engineer is the third level of appeal for informal dispute resolution.

Geotextile – Synthetic fiber used in civil engineering applications, serving the primary functions of separation and filtration.

House Connection Sewer – A sewer, within a public street or right-of-way, proposed to connect any parcel, lot, or part of a lot with a mainline sewer.

House Sewer – A sewer, wholly within private property, proposed to connect any building to a house connection sewer.

Luminaire – The lamp housing including the optical and socket assemblies (and ballast if so specified).

Luminaire Arm – The structural member, bracket, or mast arm, which, mounted on the standard, supports the luminaire.

Minor Bid Item – a single contract item constituting less than 10 percent (10%) of the original Contract Price bid.

Modification – Includes Change Orders and Supplemental Agreements. A Modification may only be used after the effective date of the Contract.

Notice of Award – The written notice by the Agency to the successful Bidder stating that upon compliance by it with the required conditions, the Agency will execute the Contract.

Notice to Proceed – A written notice given by the Agency to the Contractor fixing the date on which the Contract time will start.

Own Organization - When used in Section 2-3.1 – Employees of the Contractor who are hired, directed, supervised and paid by the Contractor to accomplish the completion of the Work. Further, such employees have their employment taxes, State disability insurance payments, State and Federal income taxes paid and administered, as applicable, by the Contractor. When used in Section 2-3.1 “own organization” means construction equipment that the Contractor owns or leases and uses to accomplish the Work. Equipment that is owner operated or leased equipment with an operator is not part of the Contractor's Own Organization and will not be included for the purpose of compliance with Section 2-3.1.

Person – Any individual, firm, association, partnership, corporation, trust, joint venture, or other legal entity.

Plans – The drawings, profiles, cross sections, working drawings, and supplemental drawings, or reproductions thereof, approved by the Engineer, which show the location, character, dimensions, or details of the Work.

Private Contract – Work subject to Agency inspection, control, and approval, involving private funds, not administered by the Agency.

Project Inspector – the Engineer’s designated representative for inspection, contract administration and first level for informal dispute resolution.

Proposal – See Bid.

Reference Specifications – Those bulletins, standards, rules, methods of analysis or test, codes, and specifications of other agencies, engineering societies, or industrial associations referred to in the Contract Documents. These refer to the latest edition, including amendments in effect and published at the time of advertising the project or issuing the permit, unless specifically referred to by edition, volume, or date.

Roadway – The portion of a street reserved for vehicular use.

Service Connection – Service connections are all or any portion of the conduit, cable, or duct, including meter, between a utility distribution line and an individual consumer.

Sewer – Any conduit intended for the reception and transfer of sewage and fluid industrial waste.

Specifications – General Provisions, Standard Specifications, Technical Specifications, Reference Specifications, Supplemental Provisions, and specifications in Supplemental Agreements between the Contractor and the Board.

Standard – The shaft or pole used to support street lighting luminaire, traffic signal heads, mast arms, etc.

Standard Plans – Details of standard structures, devices, or instructions referred to on the Plans or in Specifications by title or number.

Standard Specifications – The Standard Specifications for Public Works Construction (SSPWC), the "Greenbook".

State – State of California.

Storm Drain – Any conduit and appurtenances intended for the reception and transfer of storm water.

Street – Any road, highway, parkway, freeway, alley, walk, or way.

Subbase – A layer of specified material of planned thickness between a base and the subgrade.

Subcontractor – An individual, firm, or corporation having a direct contract with the Contractor or with any other Subcontractor for the performance of a part of the Work.

Subgrade – For roadways, that portion of the roadbed on which pavement, surfacing, base, sub-base, or a layer of other material is placed. For structures, the soil prepared to support a structure.

Supervision – Supervision, where used to indicate supervision by the Engineer, shall mean the performance of obligations, and the exercise of rights, specifically imposed upon and granted to the Agency in becoming a party to the Contract. Except as specifically stated herein, supervision by the Agency shall not mean active and direct superintendence of details of the Work.

Supplemental Agreement – A written amendment of the Contract Documents signed by both parties.

Supplemental Provisions – Additions and revisions to the Standard Specifications setting forth conditions and requirements peculiar to the work.

Surety – Any individual, firm, or corporation, bound with and for the Contractor for the acceptable performance, execution, and completion of the Work, and for the satisfaction of all obligations incurred.

Tonne – Also referred to as "metric ton". Represents a unit of measure in the International System of Units equal to 1,000 kilograms.

Utility – Tracks, overhead or underground wires, pipeline, conduits, ducts, or structures, sewers, or storm drains owned, operated, or maintained in or across a public right of way or private easement.

Work – That which is proposed to be constructed or done under the Contract or permit, including the furnishing of all labor, materials, equipment, and services.

1-3 ABBREVIATIONS

1-3.1 General. The abbreviation herein, together with others in general use, are applicable to these Standard Specifications and to project Plans or other Contract Documents.

All abbreviations and symbols used on Plans for structural steel construction shall conform to those given by the "Manual of Steel Construction" published by the American Institute of Steel Construction, Inc.

1-3.2 Common Usage

Abbreviation	Word or Words
ABAN	Abandon
ABAND	Abandoned
ABS	Acrylonitrile – butadiene – styrene
AC	Asphalt Concrete
ACP	Asbestos cement pipe
ACWS	Asphalt concrete wearing surface
ALT	Alternate
APTS	Apartment and Apartments
AMER STD	American Standard
AWG	American Wire Gage (nonferrous wire)
BC	Beginning of curve
BCR	Beginning of curb return
BDRY	Boundary
BF	Bottom of footing
BLDG	Building and Buildings
BM	Bench mark
BVC	Beginning of vertical curve
B/W	Back of wall
C/C	Center to center
CAB	Crushed aggregate base
CAL/OSHA	California Occupational Safety and Health Administration
CalTrans	California Department of Transportation
CAP	Corrugated aluminum pipe
CB	Catch Basin
Cb	Curb
CBP	Catch Basin Connection Pipe
CBR	California Bearing Ratio
CCR	California Code of Regulations
CCTV	Closed Circuit TV
CES	Carlsbad Engineering Standards
CF	Curb face
CF	Cubic foot
C&G	Curb and gutter
CFR	Code of Federal Regulations
CFS	Cubic Feet per Second
CIP	Cast iron pipe
CIPP	Cast-in place pipe
CL	Clearance, center line
CLF	Chain link fence
CMB	Crushed miscellaneous base
CMC	Cement mortar-coated
CML	Cement mortar-lined
CMWD	Carlsbad Municipal Water District
CO	Cleanout (Sewer)
COL	Column
COMM	Commercial
CONC	Concrete
CONN	Connection
CONST	Construct, Construction
COORD	Coordinate
CSP	Corrugated steel pipe
CSD	Carlsbad Standard Drawings
CTB	Cement treated base
CV	Check valve
CY	Cubic yard
D	Load of pipe
dB	Decibels
DBL	Double
DF	Douglas fir
DIA	Diameter
DIP	Ductile iron pipe
DL	Dead load
DR	Dimension Ratio
DT	Drain Tile
DWG	Drawing
DWY	Driveway
DWY APPR	Driveway approach
E	Electric
EA	Each
EC	End of curve
ECR	End of curb return
EF	Each face
EG	Edge of gutter
EGL	Energy grade line
El	Elevation
ELC	Electrolier lighting conduit
ELT	Extra long ton
ENGR	Engineer, Engineering
EP	Edge of pavement
ESMT	Easement
ETB	Emulsion-treated base
EVC	End of vertical curb
EWA	Encina Wastewater Authority
EXC	Excavation
EXP JT	Expansion joint
EXST	Existing
F	Fahrenheit
F&C	Frame and cover
F&I	Furnish and install
FAB	Fabricate
FAS	Flashing arrow sign
FD	Floor drain
FDN	Foundation
FED SPEC	Federal Specification
FG	Finished grade
FH	Fire hydrant
FL	Flow line
FS	Finished surface
FT-LB	Foot-pound
FTG	Footing
FW	Face of wall
G	Gas
GA	Gauge
GAL	Gallon and Gallons
GALV	Galvanized
GAR	Garage and Garages
GIP	Galvanized iron pipe
GL	Ground line or grade line
GM	Gas meter
GNV	Ground Not Visible
GP	Guy pole

GPM ..... gallons per minute
GR ..... Grade
GRTG ..... Grating
GSP ..... Galvanized steel pipe
H ..... High or height
HB ..... Hose bib
HC ..... House connection
HDWL ..... Headwall
HGL ..... Hydraulic grade line
HORIZ ..... Horizontal
HP ..... Horsepower
HPG ..... High pressure gas
HPS ..... High pressure sodium (Light)
HYDR ..... Hydraulic
IE ..... Invert Elevation
ID ..... Inside diameter
INCL ..... Including
INSP ..... Inspection
INV ..... Invert
IP ..... Iron pipe
JC ..... Junction chamber
JCT ..... Junction
JS ..... Junction structure
JT ..... Joint
L ..... Length
LAB ..... Laboratory
LAT ..... Lateral
LB ..... Pound
LD ..... Local depression
LF ..... Linear foot
LH ..... Lamp hole
LL ..... Live load
LOL ..... Layout line
LONG ..... Longitudinal
LP ..... Lamp post
LPS ..... Low pressure sodium (Light)
LS ..... Lump sum
LTS ..... Lime treated soil
LWD ..... Leucadia Wastewater District
MAINT ..... Maintenance
MAX ..... Maximum
MCR ..... Middle of curb return
MEAS ..... Measure
MH ..... Manhole, maintenance hole
MIL SPEC ..... Military specification
MISC ..... Miscellaneous
MOD ..... Modified, modify
MON ..... Monument
MSL.. Mean Sea Level (Reg. Standard Drawing M-12)
MTBM ..... Microtunneling Boring Machine
MULT ..... Multiple
MUTCD ..... Manual on Uniform Traffic Control Devices
MVL ..... Mercury vapor light
NCTD ..... North County Transit District
NRCP ..... Nonreinforced concrete pipe
OBS ..... Obsolete
OC ..... On center
OD ..... Outside diameter
OE ..... Outer edge
OHE ..... Overhead Electric
OMWD ..... Olivenhain Municipal Water District
OPP ..... Opposite
ORIG ..... Original
PB ..... Pull box
PC ..... Point of curvature
PCC ..... Portland cement concrete or point of compound curvature
PCVC ..... Point of compound vertical curve
PE ..... Polyethylene
PI ..... Point of intersection
PL ..... Property line
PMB ..... Processed miscellaneous base
POC ..... Point on curve
POT ..... Point on tangent
PP ..... Power pole
PRC ..... Point of reverse curve
PRVC ..... Point of reverse vertical curve
PSI ..... Pounds per square inch
PT ..... Point of tangency
PVC ..... Polyvinyl chloride
PVMT ..... Pavement
PVT R/W ..... Private right-of-way
Q ..... Rate of flow in cubic feet per second
QUAD ..... Quadrangle, Quadrant
R ..... Radius
R&O ..... Rock and oil
R/W ..... Right-of-way
RA ..... Recycling agent
RAC ..... Recycled asphalt concrete
RAP ..... Reclaimed asphalt pavement
RBAC ..... Rubberized asphalt concrete
RC ..... Reinforced concrete
RCB ..... Reinforced concrete box
RCE ..... Registered civil engineer
RCP ..... Reinforced concrete pipe
RCV ..... Remote control valve
REF ..... Reference
REINF ..... Reinforced or reinforcement
RES ..... Reservoir
RGE ..... Registered geotechnical engineer
ROW ..... Right-of-Way
RR ..... Railroad
RSE ..... Registered structural engineer
RTE ..... Registered traffic engineer
S ..... Sewer or Slope, as applicable
SCCP ..... Steel cylinder concrete pipe
SD ..... Storm drain
SDNR ..... San Diego Northern Railway
SDR ..... Standard thermoplastic pipe dimension ratio (ratio of pipe O.D. to minimum wall thickness)
SDRSD ..... San Diego Regional Standard Drawings
SE ..... Sand Equivalent
SEC ..... Section
SF ..... Square foot
SFM ..... Sewer Force Main
SI ..... International System of Units (Metric)
SPEC ..... Specifications
SPPWC ..... Standard Plans for Public Works Construction
SSPWC ..... Standard Specifications for Public Works Construction
ST HWY ..... State highway
STA ..... Station
STD ..... Standard
STR ..... Straight
STR GR ..... Straight grade
STRUC ..... Structural/Structure
SW ..... Sidewalk
SWD ..... Sidewalk drain
SY ..... Square yard

T ..... Telephone
TAN ..... Tangent
TC ..... Top of curb
TEL ..... Telephone
TF ..... Top of footing
TOPO ..... Topography
TR ..... Tract
TRANS ..... Transition
TS ..... Traffic signal or transition structure
TSC ..... Traffic signal conduit
TSS ..... Traffic signal standard
TW ..... Top of wall
TYP ..... Typical
UE ..... Underground Electric
USA ..... Underground Service Alert
VAR ..... Varies, Variable
VB ..... Valve box
VC ..... Vertical curve
VCP ..... Vitrified clay pipe
VERT ..... Vertical
VOL ..... Volume
VWD ..... Vallecitos Water District
W ..... Water, Wider or Width, as applicable
WATCH ..... Work Area Traffic Control Handbook
WI ..... Wrought iron
WM ..... Water meter
WPJ ..... Weakened plane joint
XCONN ..... Cross connection
XSEC ..... Cross section

1-3.3 Institutions.

Abbreviation	Word or Words
AASHTO	American Association of State Highway and Transportation Officials
AISC	American Institute of Steel Construction
ANSI	American National Standards Institute
API	American Petroleum Institute
AREA	American Railway Engineering Association
ASTM	American Society for Testing and Materials
AWPA	American Wood Preservers Association
AWS	American Welding Society
AWWA	American Water Works Association
FHWA	Federal Highway Administration
GRI	Geosynthetic Research Institute
NEMA	National Electrical Manufacturers Association
NOAA	National Oceanic and Atmospheric Administration (Dept. of Commerce)
UL	Underwriters' Laboratories Inc.
USGS	United States Geological Survey

1-4 UNITS OF MEASURE.

1-4.1 General. U.S. Standard Measures, also called U.S. Customary System, are the principal measurement system in these specifications. However, certain material specifications and test requirements contained herein use SI units specifically and conversions to U.S. Standard Measures may or may not have been included in these circumstances. When U.S. Standard Measures are not included in parenthesis, then the SI units shall control. S.I. units and U.S. Standard Measures in parenthesis may or may not be exactly equivalent.

Reference is also made to ASTM E 380 for definitions of various units of the SI system and a more extensive set of conversion factors.

1-4.2 Units of Measure and Their Abbreviations.

U.S. Customary Unit (Abbreviations)	(Equal To)	SI Unit (Abbreviations)
1 mil (=0.001 in)		25.4 micrometer (μm)
1 inch (in)		25.4 millimeter (mm)
1 inch (in)		2.54 centimeter (cm)
1 foot (ft)		0.3048 meter (m)
1 yard (yd)		0.9144 meter (m)
1 mile (mi)		1.6093 kilometer (km)
1 square foot (ft^2)		0.0929 square meter (m^2)
1 square yard (yd^2)		0.8361 square meter (m^2)
1 cubic foot (ft^3)		0.0283 cubic meter (m^3)
1 cubic yard (yd^3)		0.7646 cubic meter (m^3)
1 acre		0.4047 hectare (ha)
1 U.S. gallon (gal)		3.7854 Liter (L)
1 fluid ounce (fl. oz.)		29.5735 millileter (mL)
1 pound mass (lb) (avoirdupois)		0.4536 kilogram (kg)
1 ounce mass (oz)		0.02835 kilogram (kg)
1 Ton (=2000 lb avoirdupois)		0.9072 Tonne (= 907 kg)
1 Poise		0.1 pascal · second (Pa · s)
1 centistoke (cs)		1 square millimeters per second (mm^2/s)
1 pound force (lbf)		4.4482 Newton (N)
1 pounds per square inch (psi)		6.8948 Kilopascal (kPa)
1 pound force per foot (lbf/ft)		1.4594 Newton per meter (N/m)
1 foot-pound force (ft-lbf)		1.3558 Joules (J)
1 foot-pound force per second ([ft-lbf]/s)		1.3558 Watt (W)
1 part per million (ppm)		1 milligram/liter (mg/L)

Temperature Units and Abbreviations

Degree Fahrenheit (°F):	Degree Celsius (°C):
°F = (1.8 x °C) + 32	°C = (°F – 32)/1.8

SI Units (abbreviation) Commonly Used in Both Systems

1 Ampere (A)
1 Volt (V)
1 Candela (cd)
1 Lumen (lm)
1 second (s)

Common Metric Prefixes

kilo (k)	10^3
centi (c)	10^{-2}
milli (m)	10^{-3}
micro (μ)	10^{-6}
nano (n)	10^{-9}
pico (p)	10^{-12}

1-5 SYMBOLS

Δ	Delta, the central angle or angle between tangents
∠	Angle
%	Percent
‘	Feet or minutes
“	Inches or seconds
1	Number
/	per or (between words)
°	Degree
PL	Property line
CL	Centerline
SL	Survey line or station line

SECTION 2 – SCOPE AND CONTROL OF WORK

2-1 AWARD AND EXECUTION OF CONTRACT. Award and execution of Contract will be as provided for in the Specifications, Instruction to Bidders, or Notice Inviting Bids.

2-2 ASSIGNMENT. No Contract or portion thereof may be assigned without consent of the Board, except that the Contractor may assign money due or which will accrue to it under the Contract. If given written notice, such assignment will be recognized by the Board to the extent permitted by law. Any assignment of money shall be subject to all proper withholdings in favor of the Agency and to all deductions provided for in the Contract. All money withheld, whether assigned or not, shall be subject to being used by the Agency for completion of the Work, should the Contractor be in default.

2-3 SUBCONTRACTS.

2-3.1 General. Each Bidder shall comply with the Chapter of the Public Contract Code including Sections 4100 through 4113. The following excerpts or summaries of some of the requirements of this Chapter are included below for information:

The Bidder shall set forth in the Bid, as provided in 4104:

> "(a) The name and location of the place of business of each subcontractor who will perform work or labor or render service to the prime contractor in or about the construction of the work or improvements, or a subcontractor licensed by the State of California who, under subcontract to the prime contractor, specially fabricates and installs a portion of the work or improvement according to detailed drawings contained in the plans and specifications, in an amount in excess of one-half of 1 percent of the prime contractor's total bid, or, in the case of bids or offers for the construction of streets or highways, including bridges, in excess of one-half of 1 percent of the prime contractor's total bid or ten thousand dollars ($10 ,000), whichever is greater."
>
> "(b) The portion of the work which will be done by each such subcontractor under this act. The prime contractor shall list only one subcontractor for each such portion as is defined by the prime contractor in his bid."

If the Contractor fails to specify a Subcontractor or specifies more than one Subcontractor for the same portion of the work to be performed under the Contract (in excess of one-half of 1 percent of the Contractor's total Bid), the Contractor shall be qualified to perform that portion itself, and shall perform that portion itself, except as otherwise provided in the Code.

As provided in Section 4107, no Contractor whose Bid is accepted shall substitute any person as Subcontractor in place of the Subcontractor listed in the original Bid, except for causes and by procedures established in Section 4107.5. This section provides procedures to correct a clerical error in the listing of a Subcontractor.

Section 41 provides that a Contractor violating any of the provisions of the Chapter violates the Contract and the Board may exercise the option either to cancel the Contract or assess the Contractor a penalty in an amount of not more than 10 percent of the subcontract involved, after a public hearing.

Should the Contractor fail to adhere to the provisions requiring the Contractor to complete **50 percent** of the contract price with its own organization, the Agency may at its sole discretion elect to cancel the contract or deduct an amount equal to 10 percent of the value of the work performed in excess of **50 percent** of the contract price by other than the Contractor's own organization. The Board shall be the sole body for determination of a violation of these provisions. In any proceedings under this section, the prime contractor shall be entitled to a public hearing before the Board and shall be notified ten (10) days in advance of the time and location of said hearing. The determination of the Board shall be final.

2-3.2 Additional Responsibility. The Contractor shall give personal attention to the fulfillment of the Contract and shall keep the Work under its control.

The Contractor shall perform, with its own organization, Contract work amounting to at least 50 percent of the Contract Price except that any designated "Specialty Items" may be performed by subcontract, and the amount of any such "Specialty Items" so performed may be deducted from the Contract Price before computing the amount required to be performed by the Contractor with its own organization. "Specialty Items" will be identified by the Agency in the Bid or Proposal. Where an entire item is subcontracted, the value of work subcontracted will be based on the Contract Unit Price. When a portion of an item is subcontracted, the value of work subcontracted will be based on the estimated percentage of the Contract Unit Price. This will be determined from information submitted by the Contractor, and subject to approval by the Engineer.

Before the work of any Subcontractor is started, the Contractor shall submit to the Engineer for approval a written statement showing the work to be subcontracted giving the name and business of each Subcontractor and description and value of each portion of the work to be so subcontracted.

2-3.3 Status of Subcontractors. Subcontractors shall be considered employees of the Contractor, and the Contractor shall be responsible for their work.

2-4 CONTRACT BONDS. Before execution of the Contract, the Bidder shall file surety bonds with the Agency to be approved by the Board in the amounts and for the purposes noted below. Bonds issued by a surety, who is authorized to issue bonds in California, and whose bonding limitation shown in said circular is sufficient to provide bonds in the amount required by the Contract shall be deemed to be approved unless specifically rejected by the Agency. Bonds from all other sureties shall be accompanied by all of the documents enumerated in Code of Civil Procedure 995.660 (a). The Bidder shall pay all bond premiums, costs, and incidentals.

Each bond shall incorporate, by reference, the Contract and be signed by both the Bidder and Surety and the signature of the authorized agent of the Surety shall be notarized.

The Contractor shall provide a faithful performance/warranty bond and payment bond (labor and materials bond) for this contract. The faithful performance/warranty bond shall be in a sum not less than one hundred percent of the total amount payable by the terms of this contract. The Contractor shall provide bonds to secure payment of laborers and materials suppliers in a sum not less than one hundred percent of the total amount payable by the terms of this contract.

Both bonds shall extend in full force and effect and be retained by the Agency during this project until they are released according to the provisions of this section.

The faithful performance/warranty bond will be reduced to 25 percent of the original amount 30 days after recordation of the Notice of Completion and will remain in full force and effect for the one-year warranty period and until all warranty repairs are completed to the satisfaction of the Engineer. The bonds to secure payment of laborers and materials suppliers shall be released six months plus 30 days after recordation of the Notice of Completion if all claims have been paid.

All bonds are to be placed with a surety insurance carrier admitted and authorized to transact the business of insurance in California and whose assets exceed their liabilities in an amount equal to or in excess of the amount of the bond. The bonds are to contain the following documents:

1) An original, or a certified copy, of the un-revoked appointment, power of attorney, by laws, or other instrument entitling or authorizing the person who executed the bond to do so.
2) A certified copy of the certificate of authority of the insurer issued by the insurance commissioner.

If the bid is accepted, the Agency may require a financial statement of the assets and liabilities of the insurer at the end of the quarter calendar year prior to 30 days next preceding the date of the execution of the bond. The financial statement shall be made by an officer's certificate as defined in Section 173 of the Corporations Code. In the case of a foreign insurer, the financial statement may be verified by the oath of the principal officer or manager residing within the United States.

Should any bond become insufficient, the Contractor shall renew the bond within 10 days after receiving notice from the Agency.

Should any Surety at any time be unsatisfactory to the Board, notice will be given the Contractor to that effect. No further payments shall be deemed due or will be made under the contract until a new Surety shall qualify and be accepted by the Board.

Changes in the Work or extensions of time, made pursuant to the Contract, shall in no way release the Contractor or Surety from its obligations. Notice of such changes or extensions shall be waived by the Surety.

2-5 PLANS AND SPECIFICATIONS.

2-5.1 General.

The Contractor shall keep at the Work site a copy of the Plans and Specifications, to which the Engineer shall have access at all times.

The specifications for the work include the General Provisions, project technical specifications, Carlsbad Engineering Standards (CES), Standard Specifications for Public Works Construction, (SSPWC), Part 2 & 3, and the latest supplements thereto, current edition at the time of bid opening as published by the "Greenbook" Committee of Public Works Standards, Inc., hereinafter designated "SSPWC", as amended.

The construction plan set is designated as “Valve Replacement Phase II Project”, City of Carlsbad Drawing No. 5019-E and consists of 48 sheets. The standard drawings used for this project are the latest edition of the San Diego Area Regional Standard Drawings, as issued by the San Diego County Department of Public Works, hereinafter designated SDRSD, together with the most recent editions of the City of Carlsbad Engineering Standards and Carlsbad Standard Drawings, as issued by the City of Carlsbad and the Carlsbad Municipal Water District, hereinafter designated as CES and CSD, respectively. Copies of some of the pertinent standard drawings are enclosed as an appendix to these General Provisions.

The Plans, Specifications, and other Contract Documents shall govern the Work. The Contract Documents are intended to be complementary and cooperative. Anything specified in the Specifications and not shown on the Plans or shown on the Plans and not specified in the Specifications, shall be as though shown on or specified in both.

The Plans shall be supplemented by such working drawings and shop drawings as are necessary to adequately control the Work.

The Contractor shall ascertain the existence of any conditions affecting the cost of the Work through a reasonable examination of the Work site prior to submitting the Bid.

Existing improvements visible at the Work site, for which no specific disposition is made on the Plans, but which interfere with the completion of the Work, shall be removed and disposed of by the Contractor.

The Contractor shall, upon discovering any error or omission in the Plans or Specifications, immediately call it to the attention of the Engineer.

2-5.2 Precedence of Contract Documents.

If there is a conflict between Contract Documents, the document highest in precedence shall control. The precedence shall be the most recent edition of the following documents listed in order of highest to lowest precedence:

1) Permits from other agencies as may be required by law.
2) Change orders, whichever occurs last.
3) Contract addenda, whichever occurs last.
4) Contract
5) General Provisions
6) Technical Specifications
7) City of Carlsbad Standard Specifications
8) Supplemental Provisions.
9) Plans.
10) Standards plans.
    a) City of Carlsbad Standard Drawings.
    b) Carlsbad Municipal Water District Standard Drawings.
    c) City of Carlsbad modifications to the San Diego Area Regional Standard Drawings.
    d) San Diego Area Regional Standard Drawings.
    e) Traffic Signal Design Guidelines and Standards.
    f) State of California Department of Transportation Standard Plans.
    g) State of California Department of Transportation Standard Specifications.
    h) California Manual on Uniform Traffic Control Devices (CA MUTCD).
11) Standard Specifications for Public Works Construction, as amended.
12) Reference Specifications.
13) Manufacturer’s Installation Recommendations

Change Orders, Supplemental Agreements and approved revisions to Plans and Specifications will take precedence over items 3) through 12) above. Detailed plans and plan views shall have precedence over general plans.

2-5.3 Submittals.

2-5.3.1 General. Submittals shall be provided through Virtual Project Manager, at the Contractor's expense, as required in 2-5.3.2, 2-5.3.3 and 2-5.3.4, when required by the Plans or Special Provisions, or when requested by the Engineer.

Prior to any site specific work, contractor shall submit a site specific work plan to the District for review and approval. Requirements for the site plan submittal can be found at the end of the supplemental conditions, attached as Appendix 'B'.

Materials shall neither be furnished nor fabricated, nor shall any work for which submittals are required by performed, before the required submittals have been reviewed and accepted by the Engineer. Neither review nor acceptance of submittals by the Engineer shall relieve the Contractor from responsibility for errors, omissions, or deviations from the Contract Documents, unless such deviations were specifically called to the attention of the Engineer in the letter of transmittal. The Contractor shall be responsible for the correctness of the submittals.

The Contractor shall allow a minimum of 20 working days for review of submittals unless otherwise specified in the Special Provisions. Each submittal shall be accompanied by a letter of transmittal.

Each submittal shall be consecutively numbered, with applicable specification section referenced on the cover sheet, including where the product will be utilized.

Resubmittals shall be labeled with the number of the original submittal followed by an ascending alphabetical designation (e.g. The label '4-C' would indicate the third instance that the fourth submittal had been given to the Engineer).

Each sheet of each submittal shall be consecutively numbered. Each set of shop drawings and submittals shall be accompanied by a letter of transmittal on the Contractor's letterhead. The Letter of transmittal shall contain the following:

1) Project title and Agency contract number.
2) Number of complete sets.
3) Contractor's certification statement.
4) Specification section number(s) pertaining to material submitted for review.
5) Submittal number (Submittal numbers shall be consecutive including subsequent submittals for the same materials.)
6) Description of the contents of the submittal.
7) Identification of deviations from the contract documents.

When submitted for the Engineer's review, Shop Drawings shall bear the Contractor's certification that the Contractor has reviewed, checked, and approved the Shop Drawings and that they are in conformance with the requirements of the Contract Documents. The Contractor shall subscribe to and shall place the following certification on all submittals:

"I hereby certify that the (equipment, material) shown and marked in this submittal is that proposed to be incorporated into this Project, is in compliance with the Contract Documents, can be installed in the allocated spaces, and is submitted for approval."

By: _____ Title: _____

Date: _____

Company Name: _____

2-5.3.2 Working Drawings. Working drawings are drawings showing details not shown on the Plans which are required to be designed by the Contractor. Working drawings shall be of a size and scale to clearly show all necessary details.

Six copies and one reproducible shall be submitted. If no revisions are required, three of the copies will be returned to the Contractor. If revisions are required, the Engineer will return one copy along with the reproducible for resubmission. Upon acceptance, the Engineer will return two of the copies to the Contractor and retain the remaining copies and the reproducible.

Working drawings are required in the following sections:

TABLE 2-5.3.2 (A)

Item	Section Number	Title	Subject
1	7-10.4.1	Safety Orders	Trench Shoring
2	207-2.5	Joints	Reinforced Concrete Pipe
3	207-8.4	Joints	Vitrified Clay Pipe
4	207-10.2.1	General	Fabricated Steel Pipe
5	300-3.2	Cofferdams	Structure Excavation & Backfill
6	303-1.6.1	General	Falsework
7	303-1.7.1	General	Placing Reinforcement
8	303-3.1	General	Prestressed Concrete Construction
9	304-1.1.1	Shop Drawings	Structural Steel
10	304-1.1.2	Falsework Plans	Structural Steel
11	304-2.1	General	Metal Hand Railings
12	306-2.1	General	Jacking Operations
13	306-3.1	General	Tunneling Operations
14	306-3.4	Tunnel Supports	Tunneling Operations
15	306-6	Remodeling Existing Sewer Facilities	Polyethylene Liner Installation
16	306-8	Microtunneling	Microtunneling Operations
17	307-4.3	Controller Cabinet Wiring Diagrams	Traffic Signal Construction

Working drawings listed above as Items 5, 6, 8, 9, 10, 12, 13, 14 and 16 shall be prepared by a Civil or Structural Engineer registered by the State of California.

Key submittals shall be submitted appropriately to ensure that the project progresses expeditiously. Key submittals include, but are not limited to, the following, and shall be submitted within the designated timeframe or per the Contractor's needs to complete the Work, whichever occurs earlier:

1) The project schedule shall be submitted within 7 calendar days after the NTP.
2) Schedule of Values shall be submitted within 14 calendar days after NTP.
3) Pre-construction videos for each site shall be submitted no more than four weeks or less than two weeks prior to beginning work at each respective site.
4) Working drawings for each site shall be submitted at least six weeks prior to beginning work at each respective site.

2-5.3.3 Shop Drawings. Shop drawings are drawings showing details of manufactured or assembled products proposed to be incorporated into the Work. Shop drawings required shall be as specified in the Special Provisions.

2-5.3.4 Supporting Information. Supporting information is information required by the Specifications for the purposes of administration of the Contract, analysis for verification of conformance with the Specifications, the operation and maintenance of a manufactured product or system to be constructed as part of the Work, and other information as may be required by the Engineer. Six copies of the supporting information shall be submitted to the Engineer prior to the start of the Work unless otherwise specified in the Special Provisions or directed by the Engineer. Supporting information for systems shall be bound together and include all manufactured items for the system. If resubmittal is not required, three copies will be returned to the Contractor. Supporting information shall consist of the following and is required unless otherwise specified in the Special Provisions:

1) List of Subcontractors per 2-3.2.
2) List of Materials per 4-1.4.
3) Certifications per 4-1.5.
4) Construction Schedule per 6-1.
5) Confined Space Entry Program per 7-10.4.4.
6) Concrete mix designs per 201-1.1.
7) Asphalt concrete mix designs per 203-6.1.
8) Data, including, but not limited to, catalog sheets, manufacturer's brochures, technical bulletins, specifications, diagrams, product samples, and other information necessary to describe a system, product or item. This information is required for irrigation systems, street lighting systems, and traffic signals, and may also be required for any product, manufactured item, or system.

2-5.4 Record Drawings. The Contractor shall provide and keep up-to-date a complete red-lined, full-size record set of blue-line prints, which shall be corrected in red daily in a legible and professional manner and show every change from the original drawings and specifications and the exact "as-built" locations, sizes and kinds of equipment, underground piping, valves, and all other work not visible at surface grade. Items required to be shown shall be dimensioned by the Contractor from two permanent points of reference (buildings, monuments, sidewalks, curbs, pavement). The accuracy of location of all items to be shown on the drawings shall be 150 mm (6") in both the vertical and horizontal planes. This set of drawings shall be kept on the job and shall be used only as a record set, are to be made available to the Engineer/Agency at each Project Meeting, shall be reviewed monthly by the Engineer as a condition of payment, and shall be delivered to the Engineer within ten (10) days of completion of the work. Payment for performing the work required by Section 2-5.4 shall be included in the various bid items and no additional payment will be made therefore.

Promptly after receipt of the Notice to Proceed, the Contractor shall set aside and maintain one copy of the full-size drawings as "record drawings". Prints are at the cost of the Contractor. "As-builts" shall be updated daily. Payment for performing the work required by Section 2-5.4 shall be included in the various bid items and no additional payment will be made therefore. Progress payments can be withheld or adjusted if "as-builts" are not up to date.

As construction progresses, the Contractor shall maintain the markup of changes on the drawing set on a continuous basis. The as-built drawings shall also incorporate any survey field notes. Changed work or conditions of the work covered up or concealed by the Contractor in advance of recordation on the record drawings shall be uncovered to allow accurate recordation of the change, then recovered, all at the Contractor's expense.

Changes shall be marked directly on the drawings. Green color-coding shall be used when showing information deleted from Drawings. Red color-coding shall be used when showing information added to Drawings. Blue color shall be used for clouding an area or areas affected by the change(s). Information shall be legible and completely detailed. The level of detail shall be sufficient to allow a draftsman to incorporate the changes into a CAD file without reference to other documents besides the marked-up drawing(s). It is not acceptable to simply reference change directives or to mark drawings: "see RFI-XX" or "see survey notes". If there is insufficient space on a drawing to markup the change, the Contractor is required to draw additional sketches to completely explain the change and attach the sketches to the drawing.

At completion of the work, the Contractor shall submit to the Engineer all such records, including complete as-built drawings and survey field notes including sketches and measurements documenting changes in the construction. Final payment will be withheld until as-built drawings, survey field notes, and record information are submitted and deemed acceptable.

2-6 WORK TO BE DONE. The Contractor shall perform all work necessary to complete the Contract in a satisfactory manner. Unless otherwise provided, the Contractor shall furnish all materials, equipment, tools, labor, and incidentals necessary to complete the Work.

2-8 RIGHT-OF-WAY. Rights-of-way, easements, or rights-of-entry for the Work will be provided by the Agency. Unless otherwise provided, the Contractor shall make arrangements, pay for, and assume all responsibility for acquiring, using, and disposing of additional work areas and facilities temporarily required. The Contractor shall indemnify and hold the Agency harmless from all claims for damages caused by such actions.

2-9 SURVEYING.

2-9.1 Permanent Survey Markers. The Contractor shall not cover or disturb permanent survey monuments or benchmarks without the consent of the Engineer. Where the Engineer concurs, in writing, with the Contractor that protecting an existing monument in place is impractical, the Contractor shall employ a licensed land surveyor or a registered civil engineer authorized to practice land surveying within the State of California, hereinafter Surveyor, to establish the location of the monument before it is disturbed. The Contractor shall have the monument replaced by the Surveyor no later than thirty (30) days after construction at the site of the replacement is completed. The Surveyor shall file corner record(s) as required by §§ 8772 and 8773, et seq. of the California Business and Professions Code.

When a change is made in the finished elevation of the pavement of any roadway in which a permanent survey monument is located, the Contractor shall adjust the monument frame and cover to the new grade within 7 days of paving unless the Engineer shall approve otherwise. Monument frames and covers shall be protected during street sealing or painting projects or be cleaned to the satisfaction of the Engineer.

2-9.2 Survey Service. The Contractor shall hire and pay for the services of a Surveyor, hereinafter Surveyor to perform all work necessary for establishing control, construction staking, records research and all other surveying work necessary to construct the work, provide surveying services as required herein and provide surveying, drafting and other professional services required to satisfy the requirements of the Land Surveyors Act. Surveyor shall be resident on the site during all surveying operations and shall personally supervise and certify the surveying work.

2-9.2.1 Submittal of Surveying Data. All surveying data submittals shall conform to the requirements of Section 2-5.3.3, “Submittals”, herein. The Contractor shall submit grade sheets to the Engineer before commencing work in the area affected by the grade sheets. The Contractor shall submit field notes for all surveying required herein to the Engineer within ten days of performing the survey. All surveying field notes, grade sheets and survey calculations shall be submitted in bound form on 215mm by 280 mm ($8^1/_2$” by 11”) paper. The field notes, calculations and supporting data shall be clear and complete. Supporting data shall include all maps, affidavits, plats, field notes from earlier surveys and all other evidence used by the Surveyor to determine the location of the monuments set. The field notes and calculations will be labeled with name of the Surveyor, the party chief, the field crewmembers and the author of the field notes or calculations. They shall be annotated with the date of observation or calculation, be numbered with consecutive page numbers and shall be readable without resort to any electronic aid, computer program or documentation for any computer program. The field notes shall be prepared in conformance with the CALTRANS “Surveys Manual”. The Contractor shall have a Record of Survey prepared by the Surveyor and file it in conformance with §§ 8700 - 8805 of the State of California Business and Professions Code when the Surveyor performs any surveying that such map is required under §§ 8762 of the State of California Business and Professions Code and whenever the Surveyor shall establish, set or construct any permanent survey monument. SDRS drawing M-10 type monuments, bolts, spikes, leaded tacks and nails (when set in concrete), iron pipes, reinforcing steel and all monuments and marks that are at, or accessory to, property corners and street centerlines are permanent survey monuments. The Record of Survey shall show all monuments set, control monuments used, the basis of bearings and all other data needed to determine the procedure of survey and the degree of accuracy attained by the field surveying including the unadjusted ratio of closure. The unadjusted ratio of closure shall not exceed 1 part in 40,000. The record of survey shall show the location and justification of location of all permanent monuments set and their relation to the street right-of-way. Record(s) of Survey(s) shall be submitted for the Engineer’s review and approval before submittal to the County Surveyor and before submittal to the County Recorder.

2-9.2.2 Survey Requirements, Stakes shall be set at offsets approved by the Engineer at no greater intervals than specified in TABLE 2-9.2.2(A) as measured along the project stationing. Stakes shall be set to show the location and grade of future curbs adjacent to traffic signal locations where the curb is not being built as a part of this contract. Staking and marking shall be completed by the Surveyor and inspected and approved by the Engineer before the start of construction in the area marked. Centerline monument shall have the disk stamped with the date the monument was set and the registration number of the Surveyor. Habitat mitigation sites and other areas to be preserved that are shown on the plans shall be staked and flagged prior to the start of any other activities within the limits of the work. When curb and gutter does not exist and is not being installed as a part of the project the location of adjacent facilities being constructed as a part of the contract the Contractor shall place stakes defining the horizontal and vertical location of such adjacent utility vaults, poles or other facilities that are being installed as parts of, or adjunct to, the project either by the Contractor and/or those noted on the plans as to be installed by others.

TABLE 2-9.2.2(A)
Survey Requirements for Construction Staking

Feature Staked	Stake Description ②	Centerline or Parallel to Centerline Spacing④, ⑥	Lateral Spacing ③, ⑥	Setting Tolerance (Within)
Street Centerline	SDRS M-10 Monument	≤1000', Street Intersections, Begin and end of curves, only when shown on the plans	on street centerline	0.02' Horizontal, also see Section 2-9.2.1 herein
Clearing	Lath in soil, painted line on PCC & AC surfaces	lath - Intervisible, ≤ 50' on tangents & ≤ 25' on curves, Painted line - continuous	at clearing line	1' Horizontal
Slope	RP + Marker Stake	Intervisible and ≤ 50'	Grade Breaks & ≤ 25'	0.1' Vertical & Horizontal
Fence	RP + Marker Stake	≤ 200' on tangents, ≤ 50' on curves when R≥ 1000' & 25' on curves when R≤ 1000'	N/A (constant offset)	0.1' Horizontal
Rough Grade Cuts or Fills ≥ 10 m (33')	RP + Marker Stake	≤ 50'	N/A	0.1' Vertical & Horizontal
Final Grade (includes top of: Basement soil, subbase and base)	RP + Marker Stake, Blue-top in grading area	≤ 50' on tangents & curves when R≥ 1000' & ≤ 25' on curves when R ≤ 1000'	≤ 22'	3/8" Horizontal & 1/4" Vertical
Asphalt Pavement Finish Course	RP, paint on previous course	≤ 25' or as per the intersection grid points shown on the plan whichever provides the denser information	edge of pavement, paving pass width, crown line & grade breaks	3/8" Horizontal & 1/4" Vertical
Drainage Structures, Pipes & similar Facilities①, ⑦	RP + Marker Stake	intervisible & ≤ 25', beginning and end, BC & EC of facilities, Grade breaks, Alignment breaks, Junctions, Inlets & similar facilities, Risers & similar facilities (except plumbing), Skewed cut-off lines	as appropriate	3/8" Horizontal & 1/4" Vertical
Curb	RP + Marker Stake	≤ 25', BC & EC, at ¼Δ, ½Δ & ¾Δ on curb returns & at beginning & end	(constant offset)	3/8" Horizontal & 1/4" Vertical
Traffic Signal ①		Vertical locations shall be based on the ultimate elevation of curb and sidewalk		
Signal Poles & Controller ①	RP + Marker Stake	at each pole & controller location	as appropriate	3/8" Horizontal & 1/4" Vertical
Junction Box ①	RP + Marker Stake	at each junction box location	as appropriate	3/8" Horizontal & 1/4" Vertical
Conduit ①	RP + Marker Stake	≤ 50' on tangents & curves when R≥ 1000' & ≤ 25' on curves when R ≤ 1000' or where grade ≤ 0.30%	as appropriate	3/8" Horizontal & when depth cannot be measured from existing pavement 1/4" Vertical
Minor Structure ①	RP + Marker Stake + Line Stake	for catch basins: at centerline of box, ends of box & wings & at each end of the local depression ⑤	as appropriate	3/8" Horizontal & 1/4" Vertical (when vertical data needed)
Abutment Fill	RP + Marker Stake + Line Stake	≤ 50' & along end slopes & conic transitions	as appropriate	0.1' Vertical & Horizontal
Wall ①	RP + Marker Stake + Line Point +Guard Stake	≤ 50' and at beginning & end of: each wall, BC & EC, layout line angle points, changes in footing dimensions &/or elevation & wall height	as appropriate	1/4" Horizontal & 1/4" Vertical

Feature Staked	Stake Description ②	Centerline or Parallel to Centerline Spacing④, ⑥	Lateral Spacing ③, ⑥	Setting Tolerance (Within)
Major Structure ⑤				
Footings, Bents, Abutments & Wingwalls	RP + Marker Stake + Line Point +Guard Stake	10' to 33' as required by the Engineer, BC & EC, transition points & at beginning & end. Elevation points on footings at bottom of columns	as appropriate	$^3/_8$" Horizontal & $^1/_4$" Vertical
Superstructures	RP	10' to 33' sufficient to use string lines, BC & EC, transition points & at beginning & end. Elevation points on footings at bottom of columns	as appropriate	$^3/_8$" Horizontal & $^1/_4$" Vertical
Miscellaneous ⑤				
Contour Grading ①	RP + Marker Stake	≤ 50'	along contour line	0.1' Vertical & Horizontal
Utilities ①, ⑦	RP + Marker Stake	≤ 50' on tangents & curves when R≥ 1000' & ≤ 25' on curves when R ≤ 1000' or where grade ≤ 0.30%	as appropriate	$^3/_8$" Horizontal & $^1/_4$" Vertical
Channels, Dikes & Ditches ①	RP + Marker Stake	intervisible & ≤ 100', BC & EC of facilities, Grade breaks, Alignment breaks, Junctions, Inlets & similar facilities	as appropriate	0.1' Horizontal & $^1/_4$" Vertical
Signs ①	RP + Marker Stake + Line Point +Guard Stake	At sign location	Line point	0.1' Vertical & Horizontal
Subsurface Drains ①	RP + Marker Stake	intervisible & ≤ 50', BC & EC of facilities, Grade breaks, Alignment breaks, Junctions, Inlets & similar facilities, Risers & similar facilities	as appropriate	0.1' Horizontal & $^1/_4$" Vertical
Overside Drains ①	RP + Marker Stake	longitudinal location	At beginning & end	0.1' Horizontal & $^1/_4$" Vertical
Markers ①	RP + Marker Stake	for asphalt street surfacing ≤ 50' on tangents & curves when R≥ 1000' & ≤ 25' on curves when R ≤ 1000'.	At marker location(s)	$^1/_4$" Horizontal
Railings & Barriers ①	RP + Marker Stake	At beginning & end and ≤ 50' on tangents & curves when R ≥ 1000' & ≤ 25' on curves when R ≤ 1000'	at railing & barrier location(s)	$^3/_8$" Horizontal & Vertical
AC Dikes ①	RP + Marker Stake	At beginning & end	as appropriate	0.1' Horizontal & Vertical
Box Culverts		10' to 33' as required by the Engineer, BC & EC, transition points & at beginning & end. Elevation points on footings & at invert	as appropriate	$^3/_8$" Horizontal & $^1/_4$" Vertical
Pavement Markers①	RP	200' on tangents, 50' on curves when R ≥ 1000' & 25' on curves when R ≤ 1000'. For PCC surfaced streets lane cold joints will suffice	at pavement marker location(s)	$^1/_4$" Horizontal

① Staking for feature may be omitted when adjacent marker stakes reference the offset and elevation of those features and the accuracy requirements of the RP meet the requirements for the feature

② Reference points shall be sufficiently durable and set securely enough to survive with accuracy intact throughout the installation & inspection of the features or adjacent facilities for which they provide control. RP means reference point for the purposes of this table

③ Perpendicular to centerline.

④ Some features are not necessarily parallel to centerline but are referenced thereto

⑤ Multi-plane surfaced features shall be staked so as to provide line & grade information for each plane of the feature

⑥ ≥ means greater than, or equal to, the number following the symbol. ≤ means less than, or equal to, the number following the symbol.

⑦ The cut datum for storm drainage & sanitary sewer pipes & similar structures shall be their invert. The cut datum for all other utilities shall be the top of their pipe or conduit.

All guard stakes, line stakes and lath shall be flagged. \Unless otherwise approved by the Engineer flagging, paint and marking cards shall be the color specified in TABLE 2-9.2.2(B)

TABLE 2-9.2.2(B)
Survey Stake Color Code for Construction Staking

Type of Stake	Description	Color*
Horizontal Control	Coordinated control points, control lines, control reference points, centerline, alignments, etc.	White/Red
Vertical Control	Bench marks	White/Orange
Clearing	Limits of clearing	Yellow/Black
Grading	Slope, intermediate slope, abutment fill, rough grade, contour grading, final grade, etc.	Yellow
Structure	Bridges, sound and retaining walls, box culverts, etc.	White
Drainage, Sewer, Curb	Pipe culverts, junction boxes, drop inlets, headwalls, sewer lines, storm drains, slope protection, curbs, gutters, etc.	Blue
Right-of-Way	Fences, R/ W lines, easements, property monuments, etc.	White/Yellow
Miscellaneous	Signs, railings, barriers, lighting, etc.	Orange

* Flagging and marking cards, if used.

2-9.2.3 Payment for Survey, Payment for work performed to satisfy the requirements of Sections 2-9.1 through 2-9.2.2 shall be included in the actual bid items requiring the survey work and no additional payment will be made. Extension of unit prices for extra work shall include full compensation for attendant survey work and no additional payment will be made. Payment for the replacement of disturbed monuments and the filing of records of survey and/or corner records, including filing fees, shall be incidental to the work necessitating the disturbance of said monuments and no additional payment will be made.

2-9.3 Private Engineers. Surveying by private engineers on the Work shall conform to the quality and practice required by the Engineer.

2-9.4 Line and Grade. All work shall conform to the lines, elevations, and grades shown on the Plans.

Three consecutive points set on the same slope shall be used together so that any variation from a straight grade can be detected. Any such variation shall be reported to the Engineer. In the absence of such report, the Contractor shall be responsible for any error in the grade of the finished work.

Grades for underground conduits will be set at the surface of the ground. The Contractor shall transfer them to the bottom of the trench.

2-10 AUTHORITY OF BOARD AND ENGINEER. The Board has the final authority in all matters affecting the Work. Within the scope of the Contract, the Engineer has the authority to enforce compliance with the Plans and Specifications. The Contractor shall promptly comply with instructions from the Engineer or an authorized representative.

The decision of the Engineer is final and binding on all questions relating to: quantities; acceptability of material, equipment, or work; execution, progress or sequence of work; and interpretation of the Plans, Specifications, or other drawings. This shall be precedent to any payment under the Contract, unless otherwise ordered by the Board.

2-10.1 Availability of Records, The Contractor shall, at no charge to the Agency, provide copies of all records in the Contractor's or subcontractor's possession pertaining to the work that the Engineer may request.

2-10.2 Audit and Inspection, Contractor agrees to maintain and/or make available, to the Engineer, within San Diego County, accurate books and accounting records relative to all its activities and to contractually require all subcontractors to this Contract to do the same. The Engineer shall have the right to monitor, assess, and evaluate Contractor's and its subcontractors' performance pursuant to this Agreement, said monitoring, assessments, and evaluations to include, but not be limited to, audits, inspection of premises, reports, contracts, subcontracts and interviews of Contractor's staff and the staff of all subcontractors to this contract. At any time during normal business hours and as often as the Engineer may deem necessary, upon reasonable advance notice, Contractor shall make available to the Engineer for examination, all of its, and all subcontractors to this contract, records with respect to all matters covered by this Contract and will permit the Engineer to audit, examine, copy and make excerpts or transcripts from such data and records, and to make audits of all invoices, materials, payrolls, records of personnel, and other data relating to all matters covered by this Contract. However, any such activities shall be carried out in a manner so as to not unreasonably interfere with Contractor's ongoing business operations. Contractor and all subcontractors to this contract shall maintain such data and records for as long as may be required by applicable laws and regulations.

2-11 INSPECTION. The Work is subject to inspection and approval by the Engineer. The Contractor shall notify the Engineer before noon of the working day before inspection is required. Work shall be done only in the presence of the Engineer, unless otherwise authorized. Any work done without proper inspection will be subject to rejection. The Engineer and any authorized representatives shall at all times have access to the Work during its construction at shops and yards as well as the project site. The Contractor shall provide every reasonable facility for ascertaining that the materials and workmanship are in accordance with these specifications. Inspection of the Work shall not relieve the Contractor of the obligation to fulfill all conditions of the Contract.

SECTION 3 – CHANGES IN WORK

3-1 CHANGES REQUESTED BY THE CONTRACTOR.

3-1.1 General. Changes in the Plans and Specifications, requested in writing by the Contractor, which do not materially affect the Work and which are not detrimental to the Work or to the interests of the Agency, may be granted by the Engineer. Nothing herein shall be construed as granting a right to the Contractor to demand acceptance of such changes.

3-1.2 Payment for Changes Requested by the Contractor. If such changes are granted, they shall be made at a reduction in cost or no additional cost to the Agency.

3-2 CHANGES INITIATED BY THE AGENCY.

3-2.1 General. The Agency may change the Plans, Specifications, character of the work, or quantity of work provided the total arithmetic dollar value of all such changes, both additive and deductive, does not exceed 25 percent of the Contract Price. Should it become necessary to exceed this limitation, the change shall be by written Supplemental Agreement between the Contractor and Agency, unless both parties agree to proceed with the change by Change Order.

Change Orders shall be in writing and state the dollar value of the change or established method of payment, any adjustment in contract time of completion, and when negotiated prices are involved, shall provide for the Contractor's signature indicating acceptance.

3-2.2 Payment.

3-2.2.1 Contract Unit Prices. If a change is ordered in an item of work covered by a Contract Unit Price, and such change does not involve substantial change in character of the work from that shown on the Plans or specified in the Specifications, then an adjustment in payment will be made. This adjustment will be based upon the increase or decrease in quantity and the Contract Unit Price.

If the actual quantity of an item of work covered by a Contract Unit Price and constructed in conformance with the Plans and Specifications varies from the Bid quantity by 50 percent or less, payment will be made at the Contract Unit Price. If the actual quantity of said item of work varies from the Bid quantity by more than 50 percent, payment will be made per Section 3-2.2.2 or 3-2.2.3 as appropriate.

If a change is ordered in an item of work covered by a Contract Unit Price, and such change does involve a substantial change in the character of the work from that shown on the Plans or specified in the Specifications, an adjustment in payment will be made per Section 3-2.4.

3-2.2.2 Increases of More Than 50 Percent. Should the actual quantity of an item of work covered by a Contract Unit Price and constructed in conformance with the Plans and Specifications, exceed the Bid quantity by more than 50 percent, payment for the quantity in excess of 125 percent of the Bid quantity will be made on the basis of an adjustment in the Contract Unit Price mutually agreed to by the Contractor and the Agency, or at the option of the Engineer, on the basis of Extra Work per Section 3-3. The Extra Work per Section 3-3, basis of payment, shall not include fixed costs. Fixed costs shall be deemed to have been recovered by the Contractor through payment for 150 percent of the Bid quantity at the Contract Unit Price.

3-2.2.3 Decreases of More Than 50 Percent. Should the actual quantity of an item of work covered by a Contract Unit Price, and constructed in conformance with the Plans and Specifications, be less than 50 percent of the Bid quantity, an adjustment in payment will not be made unless so requested in writing by the Contractor. If the Contractor so requests, payment will be made on the basis of an adjustment in the Contract Unit Price mutually agreed to by the Contractor and the Agency, or at the option of the Engineer, on the basis of Extra Work per Section 3-3; however, in no case will payment be less than would be made for the actual quantity at the Contract Unit Price nor more than would be made for 50 percent of the Bid quantity at the Contract Unit Price.

3-2.3 Stipulated Unit Prices. Stipulated Unit Prices are unit prices established by the Agency in the Contract Documents as distinguished from Contract Unit Prices submitted by the Contractor. Stipulated Unit Prices may be used for the adjustment of Contract changes when so specified in the Special Provisions.

3-2.4 Agreed Prices. Agreed Prices are prices for new or unforeseen work, or adjustments in Contract Unit Prices per Section 3-2.2, established by mutual agreement between the Contractor and the Agency. If mutual agreement cannot be reached, the Engineer may direct the Contractor to proceed on the basis of Extra Work in accordance per Section 3-3, except as otherwise specified in Sections 3-2.2.2 and 3-2.2.3.

3.2.4.1 Schedule of Values. Within 14 calendar days of the NTP, Contractor shall provide a schedule of values for all lump sum bid items that shall be used for the purpose of progress payments. The prices shall be valid for the purpose of change orders to the project.

3.2.5 Eliminated Items. Should any Bid item be eliminated in its entirety, payment will be made to the Contractor for its actual costs incurred in connection with the eliminated item prior to notification in writing from the Engineer so stating its elimination. If material conforming to the Plans and Specifications is ordered by the Contractor for use in the eliminated item prior to the date of notification of elimination by the Engineer, and if the order for that material cannot be canceled, payment will be made to the Contractor for the actual cost of the material. In this case, the material shall become the property of the Agency. Payment will be made to the Contractor for its actual costs for any further handling. If the material is returnable, the material shall be returned and payment will be made to the Contractor for the actual cost of charges made by the supplier for returning the material and for handling by the Contractor. Actual costs, as used herein, shall be computed on the basis of Extra Work per Section 3-3.

3-3 EXTRA WORK.

3-3.1 General. New or unforeseen work will be classified as “extra work” when the Engineer determines that it is not covered by Contract Unit Prices or stipulated unit prices.

3-3.2 Payment.

3-3.2.1 General. When the price for the extra work cannot be agreed upon, the Agency will pay for the extra work based on the accumulation of costs as provided herein.

3-3.2.2 Basis for Establishing Costs.

(a) **Labor.** The costs of labor will be the actual cost for wages of workers performing the extra work at the time the extra work is done, plus employer payments of payroll taxes, workers compensation insurance, liability insurance, health and welfare, pension, vacation, apprenticeship funds, and other direct costs, resulting from Federal, State, or local laws, as well as assessments or benefits required by lawful collective bargaining agreements.

The use of a labor classification which would increase the extra work cost will not be permitted unless the Contractor establishes the necessity for such additional costs. Labor costs for equipment operators and helpers shall be reported only when such costs are not included in the invoice for equipment rental. The labor cost for foremen shall be proportioned to all of their assigned work and only that applicable to extra work will be paid.

Nondirect labor costs, including superintendence, shall be considered part of the markup of Section 3-3.2.3 (a).

(b) **Materials.** The cost of materials reported shall be at invoice or lowest current price at which such materials are locally available and delivered to the job site in the quantities involved, plus sales tax, freight, and delivery.

The Agency reserves the right to approve materials and sources of supply, or to supply materials to the Contractor if necessary for the progress of the Work. No markup shall be applied to any material provided by the Agency.

(c) **Tool and Equipment Rental.** No payment will be made for the use of tools which have a replacement value of $200 or less.

Regardless of ownership, the rates and right-of-way delay factors to be used in determining rental and delay costs shall be the edition of the, “Labor Surcharge and Equipment Rental Rates” published by CALTRANS, current at the time of the actual use of the tool or equipment. The right-of-way delay factors therein shall be used as multipliers of the rental rates for determining the value of costs for delay to the Contractor and subcontractors, if any. The labor surcharge rates published therein are not a part of this contract.

The rental rates paid shall include the cost of fuel, oil, lubrication, supplies, small tools, necessary attachments, repairs and maintenance of any kind, depreciation, storage, insurance, and all incidentals. Necessary loading and transportation costs for equipment used on the extra work shall be included.

If equipment is used intermittently and, when not in use, could be returned to its rental source at less expense to the Agency than holding it at the Work site, it shall be returned, unless the Contractor elects to keep it at the Work site, at no expense to the Agency.

All equipment shall be acceptable to the Engineer, in good working condition, and suitable for the purpose for which it is to be used. Manufacturer’s ratings and approved modifications shall be used to classify equipment and it shall be powered by a unit of at least the minimum rating recommended by the manufacturer.

The reported rental time for equipment already at the Work site shall be the duration of its use on the extra work. This time begins when equipment is first put into actual operation on the extra work, plus the time required to move it from its previous site and back, or to a closer site.

(d) **Other Items.** The Agency may authorize other items which may be required on the extra work, including labor, services, material, and equipment. These items must be different in their nature from those required for the Work and be of a type not ordinarily available from the Contractor or Subcontractors.

Invoices covering all such items in detail shall be submitted with the request for payment.

(e) **Invoices.** Vendors' invoices for material, equipment rental and other expenditures shall be submitted with the request for payment. If the request for payment is not substantiated by invoices or other documentation, the Agency may establish the cost of the item involved at the lowest price which was current at the time of the report.

3-3.2.3 Markup.

(a) **Work by Contractor.** The following percentages shall be added to the Contractor's costs and shall constitute the markup for all overhead and profits:

1) Labor ……..… 20
2) Materials …… 15
3) Equipment Rental ……. 15
4) Other Items and Expenditures … 15

To the sum of the costs and markups provided for in this section, 1 percent shall be added as compensation for bonding.

(b) **Work by Subcontractor.** When all or any part of the extra work is performed by a Subcontractor, the markup established in Section 3-3.2.3(a) shall be applied to the Subcontractor's actual cost of such work. A markup of 10 percent on the first $5,000 of the subcontracted portion of the extra work and a markup of 5 percent on work added in excess of $5,000 of the subcontracted portion of the extra work may be added by the Contractor.

3-3.3 Daily Reports by Contractor. When the price for the extra work cannot be agreed upon, the Contractor shall submit a daily report to the Engineer on forms approved by the Agency. Included are applicable delivery tickets, listing all labor, materials, and equipment involved for that day, and other services and expenditures when authorized. Payment for extra work will not be made until such time that the Contractor submits completed daily reports and all supporting documents to the Engineer. Failure to submit the daily report by the close of the next working day may waive any rights for that day. An attempt shall be made to reconcile the report daily, and it shall be signed by the Engineer and the Contractor. In the event of disagreement, pertinent notes shall be entered by each party to explain points which cannot be resolved immediately. Each party shall retain a signed copy of the report. Reports by Subcontractors or others shall be submitted through the Contractor.

The report shall:

1. Show names of workers, classifications, and hours worked.
2. Describe and list quantities of materials used.
3. Show type of equipment, size, identification number, and hours of operation, including loading and transportation, if applicable.

4. Describe other services and expenditures in such detail as the Agency may require.

3-4 CHANGED CONDITIONS. The Contractor shall promptly notify the Engineer of the following Work site conditions (hereinafter called changed conditions), in writing, upon their discovery and before they are disturbed:

1. Subsurface or latent physical conditions differing materially from those represented in the Contract;
2. Unknown physical conditions of an unusual nature differing materially from those ordinarily encountered and generally recognized as inherent in work of the character being performed; and
3. Material differing from that represented in the Contract which the Contractor believes may be hazardous waste, as defined in Section 25117 of the Health and Safety Code, that is required to be removed to a Class I, Class II, or Class III disposal site in accordance with provisions of existing law.

The Engineer will promptly investigate conditions which appear to be changed conditions. If the Engineer determines that conditions are changed conditions and they will materially affect performance time, the Contractor, upon submitting a written request, will be granted an extension of time subject to the provisions of 6-6.

If the Engineer determines that the conditions do not justify an adjustment in compensation, the Contractor will be notified in writing. This notice will also advise the Contractor of its obligation to notify the Engineer in writing if the Contractor disagrees.

The Contractor's failure to give notice of changed conditions promptly upon their discovery and before they are disturbed shall constitute a waiver of all claims in connection therewith.

The Contractor shall not be entitled to the payment of any additional compensation for any act, or failure to act, by the Engineer, including failure or refusal to issue a change order, or for the happening of any event, thing, occurrence, or other cause, unless the Contractor shall have first given the Engineer due written notice of potential claim as hereinafter specified. Compliance with this section shall not be required as a prerequisite to notice provisions in Section 6-7.3 Contract Time Accounting, nor to any claim that is based on differences in measurement or errors of computation as to contract quantities. The written notice of potential claim for changed conditions shall be submitted by the Contractor to the Engineer upon their discovery and prior to the time that the Contractor performs the work giving rise to the potential claim. The Contractor's failure to give written notice of potential claim for changed conditions to the agency upon their discovery and before they are disturbed shall constitute a waiver of all claims in connection therewith.

The Contractor shall provide the District with a written document containing a description of the particular circumstances giving rise to the potential claim, the reasons for which the Contractor believes additional compensation may be due and nature of any and all costs involved within 20 working days of the date of service of the written notice of potential claim for changed conditions. Verbal notifications are disallowed.

The potential claim shall include the following certification relative to the California False Claims Act, Government Code Sections 12650-12655.

"The undersigned certifies that the above statements are made in full cognizance of the California False Claims Act, Government Code Sections 12650-12655. The undersigned further

understands and agrees that this potential claim, unless resolved, must be restated as a claim in response to the City's proposed final estimate in order for it to be further considered."

By: _____ Title: _____

Date: _____

Company Name: _____

The Contractor's estimate of costs may be updated when actual costs are known. The Contractor shall submit substantiation of its actual costs to the Engineer within 20 working days after the affected work is completed. Failure to do so shall be sufficient cause for denial of any claim subsequently filed on the basis of said notice of potential claim.

It is the intention of this section that differences between the parties arising under and by virtue of the contract be brought to the attention of the Engineer at the earliest possible time in order that such matters be settled, if possible, or other appropriate action promptly taken.

3-5 DISPUTED WORK. The Contractor shall give the agency written notice of potential claim prior to commencing any disputed work. Failure to give said notice shall constitute a waiver of all claims in connection therewith. If the contractor and the agency are unable to reach agreement on disputed work, the Agency may direct the contractor to proceed with the work.

Prior to proceeding with dispute resolution pursuant to Public Contract Code provisions specified hereinafter, the contractor shall attempt to resolve all disputes informally through the following dispute resolution chain of command:

1. Project Inspector
2. Construction Manager
3. Deputy City Engineer, Construction Management & Inspection
4. City Engineer
5. General Manager

The Contractor shall submit a complete report within 20 working days after completion of the disputed work stating its position on the claim, the contractual basis for the claim, along with all documentation supporting the costs and all other evidentiary materials. At each level of claim or appeal of claim the District will, within 10 working days of receipt of said claim or appeal of claim, review the Contractor's report and respond with a position, request additional information or request that the Contractor meet and present its report. When additional information or a meeting is requested the District will provide its position within 10 working days of receipt of said additional information or Contractor's presentation of its report. The Contractor may appeal each level's position up to the General Manager after which the Contractor may proceed under the provisions of the Public Contract Code.

The authority within the dispute resolution chain of command is limited to recommending a resolution to a claim to the General Manager. Actual approval of the claim is subject to the change order provisions in the contract.

All claims by the -Contractor shall be resolved in accordance with Public Contract Code section 9204, which is set forth below:

9204. (a) The Legislature finds and declares that it is in the best interests of the state and its citizens to ensure that all construction business performed on a public works project in the state that is complete and not in dispute is paid in full and in a timely manner.

(b) Notwithstanding any other law, including, but not limited to, Article 7.1 (commencing with Section 10240) of Chapter 1 of Part 2, Chapter 10 (commencing with Section 19100) of Part 2, and Article 1.5 (commencing with Section 20104) of Chapter 1 of Part 3, this section shall apply to any claim by a contractor in connection with a public works project.

(c) For purposes of this section:
(1) "Claim" means a separate demand by a contractor sent by registered mail or certified mail with return receipt requested, for one or more of the following:
(A) A time extension, including, without limitation, for relief from damages or penalties for delay assessed by a public entity under a contract for a public works project.
(B) Payment by the public entity of money or damages arising from work done by, or on behalf of, the contractor pursuant to the contract for a public works project and payment for which is not otherwise expressly provided or to which the claimant is not otherwise entitled.
(C) Payment of an amount that is disputed by the public entity.
(2) "Contractor" means any type of contractor within the meaning of Chapter 9 (commencing with Section 7000) of Division 3 of the Business and Professions Code who has entered into a direct contract with a public entity for a public works project.
(3) (A) "Public entity" means, without limitation, except as provided in subparagraph (B), a state agency, department, office, division, bureau, board, or commission, the California State University, the University of California, a city, including a charter city, county, including a charter county, city and county, including a charter city and county, district, special district, public authority, political subdivision, public corporation, or nonprofit transit corporation wholly owned by a public agency and formed to carry out the purposes of the public agency.
(B) "Public entity" shall not include the following:
(i) The Department of Water Resources as to any project under the jurisdiction of that department.
(ii) The Department of Transportation as to any project under the jurisdiction of that department.
(iii) The Department of Parks and Recreation as to any project under the jurisdiction of that department.
(iv) The Department of Corrections and Rehabilitation with respect to any project under its jurisdiction pursuant to Chapter 11 (commencing with Section 7000) of Title 7 of Part 3 of the Penal Code.
(v) The Military Department as to any project under the jurisdiction of that department.
(vi) The Department of General Services as to all other projects.
(vii) The High-Speed Rail Authority.
(4) "Public works project" means the erection, construction, alteration, repair, or improvement of any public structure, building, road, or other public improvement of any kind.
(5) "Subcontractor" means any type of contractor within the meaning of Chapter 9 (commencing with Section 7000) of Division 3 of the Business and Professions Code who either is in direct contract with a contractor or is a lower tier subcontractor.

(d) (1) (A) Upon receipt of a claim pursuant to this section, the public entity to which the claim applies shall conduct a reasonable review of the claim and, within a period not to exceed 45 days, shall provide the claimant a written statement identifying what portion of the claim is disputed and what portion is undisputed. Upon receipt of a claim, a public entity and a contractor may, by mutual agreement, extend the time period provided in this subdivision.
(B) The claimant shall furnish reasonable documentation to support the claim.

(C) If the public entity needs approval from its governing body to provide the claimant a written statement identifying the disputed portion and the undisputed portion of the claim, and the governing body does not meet within the 45 days or within the mutually agreed to extension of time following receipt of a claim sent by registered mail or certified mail, return receipt requested, the public entity shall have up to three days following the next duly publicly noticed meeting of the governing body after the 45-day period, or extension, expires to provide the claimant a written statement identifying the disputed portion and the undisputed portion.
(D) Any payment due on an undisputed portion of the claim shall be processed and made within 60 days after the public entity issues its written statement. If the public entity fails to issue a written statement, paragraph (3) shall apply.
(2) (A) If the claimant disputes the public entity's written response, or if the public entity fails to respond to a claim issued pursuant to this section within the time prescribed, the claimant may demand in writing an informal conference to meet and confer for settlement of the issues in dispute. Upon receipt of a demand in writing sent by registered mail or certified mail, return receipt requested, the public entity shall schedule a meet and confer conference within 30 days for settlement of the dispute.
(B) Within 10 business days following the conclusion of the meet and confer conference, if the claim or any portion of the claim remains in dispute, the public entity shall provide the claimant a written statement identifying the portion of the claim that remains in dispute and the portion that is undisputed. Any payment due on an undisputed portion of the claim shall be processed and made within 60 days after the public entity issues its written statement. Any disputed portion of the claim, as identified by the contractor in writing, shall be submitted to nonbinding mediation, with the public entity and the claimant sharing the associated costs equally. The public entity and claimant shall mutually agree to a mediator within 10 business days after the disputed portion of the claim has been identified in writing. If the parties cannot agree upon a mediator, each party shall select a mediator and those mediators shall select a qualified neutral third party to mediate with regard to the disputed portion of the claim. Each party shall bear the fees and costs charged by its respective mediator in connection with the selection of the neutral mediator. If mediation is unsuccessful, the parts of the claim remaining in dispute shall be subject to applicable procedures outside this section.
(C) For purposes of this section, mediation includes any nonbinding process, including, but not limited to, neutral evaluation or a dispute review board, in which an independent third party or board assists the parties in dispute resolution through negotiation or by issuance of an evaluation. Any mediation utilized shall conform to the timeframes in this section.
(D) Unless otherwise agreed to by the public entity and the contractor in writing, the mediation conducted pursuant to this section shall excuse any further obligation under Section 20104.4 to mediate after litigation has been commenced.
(E) This section does not preclude a public entity from requiring arbitration of disputes under private arbitration or the Public Works Contract Arbitration Program, if mediation under this section does not resolve the parties' dispute.
(3) Failure by the public entity to respond to a claim from a contractor within the time periods described in this subdivision or to otherwise meet the time requirements of this section shall result in the claim being deemed rejected in its entirety. A claim that is denied by reason of the public entity's failure to have responded to a claim, or its failure to otherwise meet the time requirements of this section, shall not constitute an adverse finding with regard to the merits of the claim or the responsibility or qualifications of the claimant.
(4) Amounts not paid in a timely manner as required by this section shall bear interest at 7 percent per annum.
(5) If a subcontractor or a lower tier subcontractor lacks legal standing to assert a claim against a public entity because privity of contract does not exist, the contractor may present to the public entity a claim on behalf of a subcontractor or lower tier subcontractor. A subcontractor may request

in writing, either on his or her own behalf or on behalf of a lower tier subcontractor, that the contractor present a claim for work which was performed by the subcontractor or by a lower tier subcontractor on behalf of the subcontractor. The subcontractor requesting that the claim be presented to the public entity shall furnish reasonable documentation to support the claim. Within 45 days of receipt of this written request, the contractor shall notify the subcontractor in writing as to whether the contractor presented the claim to the public entity and, if the original contractor did not present the claim, provide the subcontractor with a statement of the reasons for not having done so.

(e) The text of this section or a summary of it shall be set forth in the plans or specifications for any public works project that may give rise to a claim under this section.

(f) A waiver of the rights granted by this section is void and contrary to public policy, provided, however, that (1) upon receipt of a claim, the parties may mutually agree to waive, in writing, mediation and proceed directly to the commencement of a civil action or binding arbitration, as applicable; and (2) a public entity may prescribe reasonable change order, claim, and dispute resolution procedures and requirements in addition to the provisions of this section, so long as the contractual provisions do not conflict with or otherwise impair the timeframes and procedures set forth in this section.

(g) This section applies to contracts entered into on or after January 1, 2017.

(h) Nothing in this section shall impose liability upon a public entity that makes loans or grants available through a competitive application process, for the failure of an awardee to meet its contractual obligations.

(i) This section shall remain in effect only until January 1, 2020, and as of that date is repealed, unless a later enacted statute, that is enacted before January 1, 2020, deletes or extends that date.

In addition, all claims by Contractor for $375,000 or less shall be resolved in accordance with the procedures in the Public Contract Code, Division 2, Part 3, Chapter 1, Article 1.5 (commencing with Section 20104) which is set forth below:

ARTICLE 1.5 RESOLUTION OF CONSTRUCTION CLAIMS

20104. (a)(1) This article applies to all public works claims of three hundred seventy-five thousand dollars ($375,000) or less which arise between a contractor and a local agency.
(2) This article shall not apply to any claims resulting from a contract between a contractor and a public agency when the public agency has elected to resolve any disputes pursuant to Article 7.1 (commencing with Section 10240) of Chapter 1 of Part 2.
(b)(1) "Public work" has the same meaning as in Sections 3100 and 3106 of the Civil Code, except that "public work" does not include any work or improvement contracted for by the state or the Regents of the University of California.
(2) "Claim" means a separate demand by the contractor for (A) a time extension, (B) payment of money or damages arising from work done by, or on behalf of, the contractor pursuant to the contract for a public work and payment of which is not otherwise expressly provided for or the claimant is not otherwise entitled to, or (C) an amount the payment of which is disputed by the local agency.
(c) The provisions of this article or a summary thereof shall be set forth in the plans or specifications for any work which may give rise to a claim under this article.

(d) This article applies only to contracts entered into on or after January 1, 1991.

20104.2. For any claim subject to this article, the following requirements apply:
(a) The claim shall be in writing and include the documents necessary to substantiate the claim. Claims must be filed on or before the date of final payment. Nothing in this subdivision is intended to extend the time limit or supersede notice requirements otherwise provided by contract for the filing of claims.
(b)(1) For claims of less than fifty thousand dollars ($50,000), the local agency shall respond in writing to any written claim within 45 days of receipt of the claim, or may request, in writing, within 30 days of receipt of the claim, any additional documentation supporting the claim or relating to defenses to the claim the local agency may have against the claimant.
(2) If additional information is thereafter required, it shall be requested and provided pursuant to this subdivision, upon mutual agreement of the local agency and the claimant.
(3) The local agency's written response to the claim, as further documented, shall be submitted to the claimant within 15 days after receipt of the further documentation or within a period of time no greater than that taken by the claimant in producing the additional information, whichever is greater.
(c)(1) For claims of over fifty thousand dollars ($50,000) and less than or equal to three hundred seventy-five thousand dollars ($375,000), the local agency shall respond in writing to all written claims within 60 days of receipt of the claim, or may request, in writing, within 30 days of receipt of the claim, any additional documentation supporting the claim or relating to defenses to the claim the local agency may have against the claimant.
(2) If additional information is thereafter required, it shall be requested and provided pursuant to this subdivision, upon mutual agreement of the local agency and the claimant.
(3) The local agency's written response to the claim, as further documented, shall be submitted to the claimant within 30 days after receipt of the further documentation, or within a period of time no greater than that taken by the claimant in producing the additional information or requested documentation, whichever is greater.
(d) If the claimant disputes the local agency's written response, or the local agency fails to respond within the time prescribed, the claimant may so notify the local agency, in writing, either within 15 days of receipt of the local agency's response or within 15 days of the local agency's failure to respond within the time prescribed, respectively, and demand an informal conference to meet and confer for settlement of the issues in dispute. Upon a demand, the local agency shall schedule a meet and confer conference within 30 days for settlement of the dispute.
(e) Following the meet and confer conference, if the claim or any portion remains in dispute, the claimant may file a claim as provided in Chapter 1 (commencing with Section 900) and Chapter 2 (commencing with Section 910) of Part 3 of Division 3.6 of Title 1 of the Government Code. For purposes of those provisions, the running of the period of time within which a claim must be filed shall be tolled from the time the claimant submits his or her written claim pursuant to subdivision (a) until the time that claim is denied as a result of the meet and confer process, including any period of time utilized by the meet and confer process.
(f) This article does not apply to tort claims and nothing in this article is intended nor shall be construed to change the time periods for filing tort claims or actions specified by Chapter 1 (commencing with Section 900) and Chapter 2 (commencing with Section 910) of Part 3 of Division 3.6 of Title 1 of the Government Code.

20104.4. The following procedures are established for all civil actions filed to resolve claims subject to this article:
(a) Within 60 days, but no earlier than 30 days, following the filing or responsive pleadings, the court shall submit the matter to non-binding mediation unless waived by mutual stipulation of both parties. The mediation process shall provide for the selection within 15 days by both parties of a

disinterested third person as mediator, shall be commenced within 30 days of the submittal, and shall be concluded within 15 days from the commencement of the mediation unless a time requirement is extended upon a good cause showing to the court or by stipulation of both parties. If the parties fail to select a mediator within the 15-day period, any party may petition the court to appoint the mediator.

(b)(1) If the matter remains in dispute, the case shall be submitted to judicial arbitration pursuant to Chapter 2.5 (commencing with Section 1141.10) of Title 3 of Part 3 of the Code of Civil Procedure, notwithstanding Section 1141.11 of that code. The Civil Discovery Act of 1986 (Article 3 (commencing with Section 2016) of Chapter 3 of Title 3 of Part 4 of the Code of Civil procedure) shall apply to any proceeding brought under the subdivision consistent with the rules pertaining to judicial arbitration.

(2) Notwithstanding any other provision of law, upon stipulation of the parties, arbitrators appointed for purposes of this article shall be experienced in construction law, and, upon stipulation of the parties, mediators and arbitrators shall be paid necessary and reasonable hourly rates of pay not to exceed their customary rate, and such fees and expenses shall be paid equally by the parties, except in the case of arbitration where the arbitrator, for good cause, determines a different division. In no event shall these fees or expenses be paid by state or county funds.

(3) In addition to Chapter 2.5 (commencing with Section 1141.10) Title 3 of Part 3 of the Code of Civil Procedure, any party who after receiving an arbitration award requests a trial de novo but does not obtain a more favorable judgment shall, in addition to payment of costs and fees under that chapter, pay the attorney's fees of the other party arising out of the trial de novo.

(c) The court may, upon request by any party, order any witnesses to participate in the mediation or arbitration process.

20104.6. (a) No local agency shall fail to pay money as to any portion of a claim which is undisputed except as otherwise provided in the contract.

(b) In any suit filed under Section 20104.4, the local agency shall pay interest at the legal rate on any arbitration award or judgment. The interest shall begin to accrue on the date the suit is filed in a court of law.

Although not to be construed as proceeding under extra work provisions, the Contractor shall keep and furnish records of disputed work in accordance with Section 3-3.

SECTION 4 – CONTROL OF MATERIALS

4-1 MATERIALS AND WORKMANSHIP.

4-1.1. General. All materials, parts, and equipment furnished by the Contractor in the Work shall be new, high grade, and free from defects. Quality of work shall be in accordance with the generally accepted standards. Material and work quality shall be subject to the Engineer's approval.

Materials and work quality not conforming to the requirements of the Specifications shall be considered defective and will be subject to rejection. Defective work or material, whether in place or not, shall be removed immediately from the site by the Contractor, at its expense, when so directed by the Engineer.

If the Contractor fails to replace any defective or damaged work or material after reasonable notice, the Engineer may cause such work or materials to be replaced. The replacement expense will be deducted from the amount to be paid to the Contractor.

Used or secondhand materials, parts, and equipment may be used only if permitted by the Specifications.

4-1.2 Protection of Work and Materials. The Contractor shall provide and maintain storage facilities and employ such measures as will preserve the specified quality and fitness of materials to be used in the Work. Stored materials shall be reasonably accessible for inspection. The Contractor shall also adequately protect new and existing work and all items of equipment for the duration of the Contract.

The Contractor shall not, without the Agency's consent, assign, sell, mortgage, hypothecate, or remove equipment or materials which have been installed or delivered and which may be necessary for the completion of the Contract.

4-1.3 Inspection Requirements.

4-1.3.1 General. Unless otherwise specified, inspection is required at the source for such typical materials and fabricated items as bituminous paving mixtures, structural concrete, metal fabrication, metal casting, welding, concrete pipe manufacture, protective coating application, and similar shop or plant operations.

Steel pipe in sizes less than 18 inches and vitrified clay and cast iron pipe in all sizes are acceptable upon certification as to compliance with the Specifications, subject to sampling and testing by the Agency. Standard items of equipment such as electric motors, conveyors, elevators, plumbing fixtures, etc., are subject to inspection at the job site only. Special items of equipment such as designed electrical panel boards, large pumps, sewage plant equipment, etc., are subject to inspection at the source, normally only for performance testing. The Specifications may require inspection at the source for other items not typical of those listed in this section.

The Contractor shall provide the Engineer free and safe access to any and all parts of work at any time. Such free and safe access shall include means of safe access and egress, ventilation, lighting, shoring, dewatering and all elements pertaining to the safety of persons as contained in the State of California, California Code of Regulations, Title 8, Industrial Relations, Chapter 4, Division of Industrial Safety, Subchapter 4, Construction Safety Orders and such other safety

regulations as may apply. Contractor shall furnish Engineer with such information as may be necessary to keep the Engineer fully informed regarding progress and manner of work and character of materials. Inspection or testing of the whole or any portion of the work or materials incorporated in the work shall not relieve Contractor from any obligation to fulfill this Contract.

4-1.3.2 Inspection of Materials Not Locally Produced. When the Contractor intends to purchase materials, fabricated products, or equipment from sources located more than 50 miles outside the geographical limits of the Agency, an inspector or accredited testing laboratory (approved by the Engineer), shall be engaged by the Contractor at its expense, to inspect the materials, equipment or process. This approval shall be obtained before producing any material or equipment. The inspector or representative of the testing laboratory shall judge the materials by the requirements of the Plans and Specifications. The Contractor shall forward reports required by the Engineer. No material or equipment shall be shipped nor shall any processing, fabrication or treatment of such materials be done without proper inspection by the approved agent. Approval by said agent shall not relieve the Contractor of responsibility for complying with the Contract requirements.

4-1.3.3 Inspection by the Agency. The Agency will provide all inspection and testing laboratory services within 50 miles of the geographical limits of the Agency. For private contracts, all costs of inspection at the source, including salaries and mileage costs, shall be paid by the permittee.

4-1.4 Test of Material. Before incorporation in the Work, the Contractor shall submit samples of materials, as the Engineer may require, at no cost to the Agency. The Contractor, at its expense, shall deliver the materials for testing to the place and at the time designated by the Engineer. Unless otherwise provided, all initial testing will be performed under the direction of the Engineer, and at no expense to the Contractor. If the Contractor is to provide and pay for testing, it will be stated in the Specifications. For private contracts, the testing expense shall be borne by the permittee.

The Contractor shall notify the Engineer in writing, at least 15 days in advance, of its intention to use materials for which tests are specified, to allow sufficient time to perform the tests. The notice shall name the proposed supplier and source of material.

If the notice of intent to use is sent before the materials are available for testing or inspection or is sent so far in advance that the materials on hand at the time will not last but will be replaced by a new lot prior to use on the Work, it will be the Contractor's responsibility to renotify the Engineer when samples which are representative may be obtained.

Except as specified in these Provisions, the Agency will bear the cost of testing of locally produced materials and/or on-site workmanship where the results of such tests meet or exceed the requirements indicated in the Standard Specifications, Technical Specification, and any Supplemental Provisions. The cost of all other tests shall be borne by the Contractor.

At the option of the Engineer, the source of supply of each of the materials shall be approved by the Engineer before the delivery is started. All materials proposed for use may be inspected or tested at any time during their preparation and use. If, after incorporating such materials into the Work, it is found that sources of supply that have been approved do not furnish a uniform product, or if the product from any source proves unacceptable at any time, the Contractor shall furnish approved material from other approved sources. If any product proves unacceptable after improper storage, handling or for any other reason it shall be rejected, not incorporated into the work and shall be removed from the project site all at the Contractor's expense.

Compaction tests may be made by the Engineer and all costs for tests that meet or exceed the requirements of the specifications shall be borne by the Agency. Said tests may be made at any place along the work as deemed necessary by the Engineer. The costs of any retests made necessary by noncompliance with the specifications shall be borne by the Contractor.

4-1.5 Certification. The Engineer may waive materials testing requirements of the Specifications and accept the manufacturer's written certification that the materials to be supplied meet those requirements. Material test data may be required as part of the certification.

4-1.6 Trade Names or Equals. The Contractor may supply any of the materials specified or offer an equivalent. The Engineer shall determine whether the material offered is equivalent to that specified. Adequate time shall be allowed for the Engineer to make this determination.

Whenever any particular material, process, or equipment is indicated by patent, proprietary or brand name, or by name of manufacturer, such wording is used for the purpose of facilitating its description and shall be deemed to be followed by the words **or equal**. A listing of materials is not intended to be comprehensive, or in order of preference. The Contractor may offer any material, process, or equipment considered to be equivalent to that indicated. The substantiation of offers shall be submitted as provided in the contract documents.

The Contractor shall, at its expense, furnish data concerning items offered by it as equivalent to those specified. The Contractor shall have the material tested as required by the Engineer to determine that the quality, strength, physical, chemical, or other characteristics, including durability, finish, efficiency, dimensions, service, and suitability are such that the item will fulfill its intended function.

Test methods shall be subject to the approval of the Engineer. Test results shall be reported promptly to the Engineer, who will evaluate the results and determine if the substitute item is equivalent. The Engineer's findings shall be final. Installation and use of a substitute item shall not be made until approved by the Engineer.

If a substitute offered by the Contractor is not found to be equal to the specified material, the Contractor shall furnish and install the specified material.

The specified Contract completion time shall not be affected by any circumstance developing from the provisions of this section.

The Contractor is responsible for the satisfactory performance of substituted items. If, in the sole opinion of the Engineer, the substitution is determined to be unsatisfactory in performance, appearance, durability, compatibility with associated items, availability of repair parts and suitability of application the Contractor shall remove the substituted item and replace it with the originally specified item at no cost to the Agency.

4-1.7 Weighing and Metering Equipment. All scales and metering equipment used for proportioning materials shall be inspected for accuracy and certified within the past 12 months by the State of California Bureau of Weights and Measures, by the County Director or Sealer of Weights and Measures, or by a scale mechanic registered with or licensed by the County.

The accuracy of the work of a scale service agency, except as stated herein, shall meet the standards of the California Business and Professions Code and the California Code of

Regulations pertaining to weighing devices. A certificate of compliance shall be presented, prior to operation, to the Engineer for approval and shall be renewed whenever required by the Engineer at no cost to the Agency.

All scales shall be arranged so they may be read easily from the operator's platform or area. They shall indicate the true net weight without the application of any factor. The figures of the scales shall be clearly legible. Scales shall be accurate to within 1 percent when tested with the plant shut down. Weighing equipment shall be so insulated against vibration or moving of other operating equipment in the plant area that the error in weighing with the entire plant running will not exceed 2 percent for any setting nor 1.5 percent for any batch.

4-1.8 Calibration of Testing Equipment. Testing equipment, such as, but not limited to pressure gages, metering devices, hydraulic systems, force (load) measuring instruments, and strain-measuring devices shall be calibrated by a testing agency acceptable to the Engineer at intervals not to exceed 12 months and following repairs, modification, or relocation of the equipment. Calibration certificates shall be provided when requested by the Engineer.

4-1.9 Construction Materials Dispute Resolution (Soils, Rock Materials, Concrete, Mortar and Related Materials, Masonry Materials, Bituminous Materials, Rock Products, and Modified Asphalts). In the interest of safety and public value, whenever credible evidence arises to contradict the test values of materials, the Agency and the Contractor will initiate an immediate and cooperative investigation. Test values of materials are results of the materials' tests, as defined by these Specifications or by the special provisions, required to accept the Work. Credible evidence is process observations or test values gathered using industry accepted practices. A contradiction exists whenever test values or process observations of the same or similar materials are diverse enough such that the work acceptance or performance becomes suspect. The investigation shall allow access to all test results, procedures, and facilities relevant to the disputed work and consider all available information and, when necessary, gather new and additional information in an attempt to determine the validity, the cause, and if necessary, the remedy to the contradiction. If the cooperative investigation reaches any resolution mechanism acceptable to both the Agency and the Contractor, the contradiction shall be considered resolved and the cooperative investigation concluded. Whenever the cooperative investigation is unable to reach resolution, the investigation may then either conclude without resolution or continue by written notification of one party to the other requesting the implementation of a resolution process by committee. The continuance of the investigation shall be contingent upon recipient's agreement and acknowledged in writing within 3 calendar days after receiving a request. Without acknowledgement, the investigation shall conclude without resolution. The committee shall consist of three State of California Registered Civil Engineers. Within 7 calendar days after the written request notification, the Agency and the Contractor will each select one engineer. Within 14 calendar days of the written request notification, the two selected engineers will select a third engineer. The goal in selection of the third member is to complement the professional experience of the first two engineers. Should the two engineers fail to select the third engineer, the Agency and the Contractor shall each propose 2 engineers to be the third member within 21 calendar days after the written request notification. The first two engineers previously selected shall then select one of the four proposed engineers in a blind draw. The committee shall be a continuance of the cooperative investigation and will re-consider all available information and if necessary gather new and additional information to determine the validity, the cause, and if necessary, the remedy to the contradiction. The committee will focus upon the performance adequacy of the material(s) using standard engineering principles and practices and to ensure public value, the committee may provide engineering recommendations as necessary. Unless otherwise agreed, the committee will have 30 calendar days from its formation to complete their review and submit their findings.

The final resolution of the committee shall be by majority opinion, in writing, stamped and signed. Should the final resolution not be unanimous, the dissenter may attach a written, stamped, and signed minority opinion. Once started, the resolution process by committee shall continue to full conclusion unless:

1. Within 7 days of the formation of the committee, the Agency and the Contractor reach an acceptable resolution mechanism; or
2. Within 14 days of the formation of the committee, the initiating party withdraws its written notification and agrees to bear all investigative related costs thus far incurred; or
3. At any point by the mutual agreement of the Agency and the Contractor. Unless otherwise agreed, the Contractor shall bear and maintain a record for all the investigative costs until resolution. Should the investigation discover assignable causes for the contradiction, the assignable party, the Agency or the Contractor, shall bear all costs associated with the investigation. Should assignable causes for the contradiction extended to both parties, the investigation will assign costs cooperatively with each party or when necessary, equally. Should the investigation substantiate a contradiction without assignable cause, the investigation will assign costs cooperatively with each party or when necessary, equally. Should the investigation be unable to substantiate a contradiction, the initiator of the investigation shall bear all investigative costs. All claim notification requirements of the contract pertaining to the contradiction shall be suspended until the investigation is concluded.

4-2 MATERIALS TRANSPORTATION, HANDLING AND STORAGE. The Contractor shall order, purchase, transport, coordinate delivery, accept delivery, confirm the quantity and quality received, prepare storage area(s), store, handle, protect, move, relocate, remove and dispose excess of all materials used to accomplish the Work. Materials shall be delivered to the site of the work only during working hours, as defined in Section 6-7.2, and shall be accompanied by bills of lading that shall clearly state for each delivery: the name of the Contractor as consignee, the project name and number, address of delivery and name of consignor and a description of the material(s) shipped. Prior to storage of any materials which have been shipped to or by the Contractor to any location within the Agency's boundaries the Contractor shall provide the Engineer a copy of lease agreements for each property where such materials are stored. The lease agreement shall clearly state the term of the lease, the description of materials allowed to be stored and shall provide for the removal of the materials and restoration of the storage site within the time allowed for the Work. All such storage shall conform to all laws and ordinances that may pertain to the materials stored and to preparation of the storage site and the location of the site on which the materials are stored. Loss, damage or deterioration of all stored materials shall be the Contractor's responsibility. Conformance to the requirements of this section, both within and outside the limits of work are a part of the Work. The Engineer shall have the right to verify the suitability of materials and their proper storage at any time during the Work.

SECTION 5 – UTILITIES

5-1 LOCATION. The Agency and affected utility companies have, by a search of known records, endeavored to locate and indicate on the Plans, all utilities which exist within the limits of the work. However, the accuracy and/or completeness of the nature, size and/or location of utilities indicated on the Plans is not guaranteed.

Where underground main distribution conduits such as water, gas, sewer, electric power, telephone, or cable television are shown on the Plans, the Contractor shall assume that every property parcel will be served by a service connection for each type of utility.

As provided in Section 4216 of the California Government Code, at least 2 working days prior to commencing any excavation, the Contractor shall contact the regional notification center (Underground Service Alert of Southern California) and obtain an inquiry identification number.

The California Department of Transportation is not required by Section 4216 to become a member of the regional notification center. The Contractor shall contact it for location of its subsurface installations.

The Contractor shall determine the location and depth of all utilities, including service connections, which have been marked by the respective owners and which may affect or be affected by its operations. If no pay item is provided in the Contract for this work, full compensation for such work shall be considered as included in the prices bid for other items of work.

5-2 PROTECTION. The Contractor shall not interrupt the service function or disturb the support of any utility without authority from the owner or order from the Agency. All valves, switches, vaults, and meters shall be maintained readily accessible for emergency shutoff.

Where protection is required to ensure support of utilities located as shown on the Plans or in accordance with Section 5-1, the Contractor shall, unless otherwise provided, furnish and place the necessary protection at its expense.

Upon learning of the existence and location of any utility omitted from or shown incorrectly on the Plans, the Contractor shall immediately notify the Engineer in writing. When authorized by the Engineer, support or protection of the utility will be paid for as provided in Section 3-2.2.3 or 3-3.

The Contractor shall immediately notify the Engineer and the utility owner if any utility is disturbed or damaged. The Contractor shall bear the costs of repair or replacement of any utility damaged if located as noted in Section 5-1.

When placing concrete around or contiguous to any non-metallic utility installation, the Contractor shall at its expense:

1. Furnish and install a 2-inch cushion of expansion joint material or other similar resilient material; or
2. Provide a sleeve or other opening which will result in a 2-inch minimum-clear annular space between the concrete and the utility; or
3. Provide other acceptable means to prevent embedment in or bonding to the concrete.

Where concrete is used for backfill or for structures which would result in embedment, or partial embedment, of a metallic utility installation; or where the coating, bedding or other cathodic protection system is exposed or damaged by the Contractor's operations, the Contractor shall notify the Engineer and arrange to secure the advice of the affected utility owner regarding the procedures required to maintain or restore the integrity of the system.

5-3 REMOVAL. Unless otherwise specified, the Contractor shall remove all interfering portions of utilities shown on the Plans or indicated in the Bid documents as "abandoned" or "to be abandoned in place". Before starting removal operations, the Contractor shall ascertain from the Agency whether the abandonment is complete, and the costs involved in the removal and disposal shall be included in the Bid for the items of work necessitating such removals.

5-4 RELOCATION. When feasible, the owners responsible for utilities within the area affected by the Work will complete their necessary installations, relocations, repairs, or replacements before commencement of work by the Contractor. When the Plans or Specifications indicate that a utility installation is to be relocated, altered, or constructed by others, the Agency will conduct all negotiations with the owners and work will be done at no cost to the Contractor, except for manhole frame and cover sets to be brought to grade as provided in the Standard Specifications for Public Works Construction, Section 301-1.6, 2012 Edition. Utilities which are relocated in order to avoid interference shall be protected in their position and the cost of such protection shall be included in the Bid for the items of work necessitating such relocation.

After award of the Contract, portions of utilities which are found to interfere with the Work will be relocated, altered or reconstructed by the owners, or the Engineer may order changes in the Work to avoid interference. Such changes will be paid for in accordance with Section 3-2.

When the Plans or Specifications provide for the Contractor to alter, relocate, or reconstruct a utility, all costs for such work shall be included in the Bid for the items of work necessitating such work. Temporary or permanent relocation or alteration of utilities requested by the Contractor for its convenience shall be its responsibility and it shall make all arrangements and bear all costs.

The utility owner will relocate service connections as necessary within the limits of the Work or within temporary construction or slope easements. When directed by the Engineer, the Contractor shall arrange for the relocation of service connections as necessary between the meter and property line, or between a meter and the limits of temporary construction or slope easements. The relocation of such service connections will be paid for in accordance with provisions of Section 3-3. Payment will include the restoration of all existing improvements which may be affected thereby. The Contractor may agree with the owner of any utility to disconnect and reconnect interfering service connections. The Agency will not be involved in any such agreement.

In conformance with Section 5-6 the Contractor shall coordinate the work with utility agencies and companies. Prior to the installation of any and all utility structures within the limits of work by any utility agency or company, or its contractor, the Contractor shall place all curb or curb and gutter that is a part of the work and adjacent to the location where such utility structures are shown on the plans and are noted as being located, relocated or are otherwise shown as installed by others. In order to minimize delays to the Contractor caused by the failure of other parties to relocate utilities that interfere with the construction, the Contractor, upon the Engineer's approval, may be permitted to temporarily omit the portion of work affected by the utility. If such temporary omission is approved by the Engineer the Contractor shall place survey or other physical control markers sufficient to locate the curb or curb and gutter to the satisfaction of the utility agency or company. Such temporary omission shall be for the Contractor's convenience and no additional

compensation will be allowed therefore or for additional work, materials or delay associated with the temporary omission. The portion thus omitted shall be constructed by the Contractor immediately following the relocation of the utility involved unless otherwise directed by the Engineer.

5-5 DELAYS. The Contractor shall notify the Engineer of its construction schedule insofar as it affects the protection, removal, or relocation of utilities. Said notification shall be included as a part of the construction schedule required in Section 6-1. The Contractor shall notify the Engineer in writing of any subsequent changes in the construction schedule which will affect the time available for protection, removal, or relocation of utilities.

The Contractor will not be entitled to damages or additional payment for delays attributable to utility relocations or alterations if correctly located, noted, and completed in accordance with Section 5-1.

The Contractor may be given an extension of time for unforeseen delays attributable to unreasonably protracted interference by utilities in performing work correctly shown on the Plans.

The Agency will assume responsibility for the timely removal, relocation, or protection of existing main or trunkline utility facilities within the area affected by the Work if such utilities are not identified in the Contract Documents. The Contractor will not be assessed liquidated damages for any delay caused by failure of Agency to provide for the timely removal, relocation, or protection of such existing facilities.

If the Contractor sustains loss due to delays attributable to interferences, relocations, or alterations not covered by Section 5-1, which could not have been avoided by the judicious handling of forces, equipment, or plant, there shall be paid to the Contractor such amount as the Engineer may find to be fair and reasonable compensation for such part of the Contractor's actual loss as was unavoidable and the Contractor may be granted an extension of time.

5-6 COOPERATION. When necessary, the Contractor shall so conduct its operations as to permit access to the Work site and provide time for utility work to be accomplished during the progress of the Work.

SECTION 6 – PROSECUTION, PROGRESS, AND ACCEPTANCE OF THE WORK

6-1 CONSTRUCTION SCHEDULE AND COMMENCEMENT OF WORK. Except as otherwise provided herein and unless otherwise prohibited by permits from other agencies as may be required by law the Contractor shall begin work within ten (10) calendar days after receipt of the "Notice to Proceed".

6-1.1 Pre-Construction Meeting. After, or upon, notification of contract award, the Engineer will set the time and location for the Preconstruction Meeting. Attendance of the Contractor's management personnel responsible for the management, administration, and execution of the project is mandatory for the meeting to be convened. Failure of the Contractor to have the Contractor's responsible project personnel attend the Preconstruction Meeting will be grounds for default by Contractor per Section 6-4. No separate payment will be made for the Contractor's attendance at the meeting. The notice to proceed will only be issued on or after the completion of the preconstruction meeting.

6-1.1.1 Baseline Construction Schedule Submittal. The Contractor shall submit the Baseline Construction Schedule per the submittal requirements of Section 2-5.3. The submittal of the Baseline Construction Schedule shall include each item and element of Sections 6-1.2 through 6-1.2.9 and shall be on hard (paper) copy and electronic media conforming to Section 6-1.3.3 Electronic Media.

6-1.1.2 Three-Week Look Ahead Schedule Submittal. The Contractor shall submit a Detailed 3-week look ahead schedule. The 3-week look ahead schedule shall be updated and submitted weekly, as well as reviewed at each weekly progress meeting, throughout project duration. Detailed schedules shall include at a minimum for each site: public notifications, prep work, excavation duration, shutdown, and restoration.

6-1.2 Preparation and Review of the Baseline Construction Schedule. The Contractor shall prepare the Baseline Construction Schedule as a Critical Path Method (CPM) Schedule in the precedence diagram method (activity-on-node) format. The Baseline Construction Schedule shall depict a workable plan showing the sequence, duration, and interdependence of all activities required to represent the complete performance of all project work as well as periods where work is precluded. The Baseline Construction Schedule shall begin with the projected date of issuance of the notice to proceed and conclude with the date of final completion per the contract duration. The Baseline Construction Schedule shall include detail of all project phasing, staging, and sequencing, including all milestones necessary to define beginning and ending of each phase or stage.

6-1.2.1 Time-Scaled Network Diagram. As a part of the Baseline Construction Schedule the Contractor shall prepare and submit to the Engineer a complete time-scaled network diagram showing all of the activities, logic relationships, and milestones comprising the schedule.

6-1.2.2 Tabular Listing. As a part of the Baseline Construction Schedule the Contractor shall prepare and submit to the Engineer a tabular listing of all of the activities, showing for each activity the identification number, the description, the duration, the early start, the early finish, the late start, the late finish, the total float, and all predecessor and successor activities for the activity described.

6-1.2.3 Bar Chart. As a part of the Baseline Construction Schedule the Contractor shall prepare and submit to the Engineer a chart showing individual tasks and their durations arranged with the tasks on the vertical axis and duration on the horizontal axis. The bar chart shall use differing texture patterns or distinctive line types to show the critical path.

6-1.2.4 Schedule Software. The Contractor shall use commercially available software" program by Primavera or "Project" program by Microsoft Corporation to prepare the Baseline Construction Schedule and all updates thereto. The Contractor shall submit to the Agency source files and PDFs electronically with all network information contained thereon.

The Agency will use a "Suretrak", "Project" or equal software program for review of the Contractor's schedule. Should the Contractor elect to use a scheduling program other than the "Suretrak" program by Primavera or "Project" program by Microsoft Corporation the Contractor shall provide the Engineer three copies of the substituted program that are fully licensed to the Agency and 32 class hours of on-site training by the program publisher for up to eight Agency staff members. The classes shall be presented on Mondays through Thursdays, inclusive, between the hours of 8:00 a.m. and 5:00 p.m. The on-site training shall be held at 1635 Faraday Avenue, Carlsbad, California. The dates and times of the on-site training shall be submitted to the Engineer for approval five working days before the start of the on-site training. The on-site training shall be completed prior to the submittal of the first Baseline Construction Schedule.

6-1.2.5 Schedule Activities. Except for submittal activities, activity durations shall not be shorter than 1 working day nor longer than 15 working days, unless specifically and individually allowed by the Engineer. The Baseline Construction Schedule shall include between 100 and 500 activities, including submittals, interfaces between utility companies and other agencies, project milestones and equipment and material deliveries. The number of activities will be sufficient, in the judgment of the Engineer, to communicate the Contractor's plan for project execution, to accurately describe the project work, and to allow monitoring and evaluation of progress and of time impacts. Each activity's description shall accurately define the work planned for the activity and each activity shall have recognizable beginning and end points.

6-1.2.6 Float. Float or slack time within the schedule is available without charge or compensation to whatever party or contingency first exhausts it.

6-1.2.7 Restraints to Activities. Any submittals, utility interfaces, or any furnishing of Agency supplied materials, equipment, or services, which may impact any activity's construction shall be shown as a restraint to those activities. Time periods to accommodate the review and correction of submittals shall be included in the schedule.

6-1.2.8 Late Completion. A Baseline Construction Schedule showing a project duration longer than the specified contract duration will not be acceptable and will be grounds for determination of default by Contractor, per Section 6-4.

6-1.2.9 Early Completion. The Baseline Construction Schedule will show the Contractor's plan to support and maintain the project for the entire contractual time span of the project. Should the Contractor propose a project duration shorter than contract duration, a complete Baseline Construction Schedule must be submitted, reflecting the shorter duration, in complete accordance with all schedule requirements of Section 6-1. The Engineer may choose to accept the Contractor's proposal of a project duration shorter than the duration specified; provided the Agency is satisfied the shortened Baseline Construction Schedule is reasonable and the Agency and all

other entities, public and private, which interface with the project are able to support the provisions of the shortened Baseline Construction Schedule. The Agency's acceptance of a shortened duration project will be confirmed through the execution of a contract change order revising the project duration and implementing all contractual requirements including liquidated damages in accordance with the revised duration.

6-1.2.10 Engineer's Review. The Construction Schedule is subject to the review of the Engineer. The Engineer's determination that the Baseline Construction Schedule proposed by the Contractor complies with the requirements of these supplemental provisions shall be a condition precedent to issuance of the Notice to Proceed by the Engineer. If the Engineer determines that the Construction Schedule does not meet the requirements of these specifications the Contractor shall correct the Construction Schedule to meet these specifications and resubmit it to the Engineer. Failure of the Contractor to obtain the Engineer's determination that the initial Construction Schedule proposed by the Contractor complies with the requirements of these supplemental provisions within thirty (30) working days after the date of the preconstruction meeting shall be grounds for termination of the contract per Section 6-4. Days used by the Engineer to review the initial Construction Schedule will not be included in the 30 working days.

The Engineer will review and return to the Contractor, with any comments, the Baseline Construction Schedule within 15 working days of submittal. The Baseline Construction Schedule will be returned marked as per Sections 6-1.2.10.1 through 6-1.2.10.3.

6-1.2.10.1 "Accepted." The Contractor may proceed with the project work upon issuance of the Notice to Proceed and will receive payment for the schedule in accordance with Section 6-1.8.1.

6-1.2.10.2 "Accepted with Comments." The Contractor may proceed with the project work upon issuance of the Notice to Proceed. The Contractor must resubmit the schedule incorporating the comments prior to receipt of payment per Section 6-1.8.1.

6-1.2.10.3 "Not Accepted." The Contractor must resubmit the schedule incorporating the corrections and changes of the comments prior to receipt of payment per Section 6-1.8.1. The Notice to Proceed will not be issued by the Engineer if the changes of the comments are not submitted as required hereinbefore and marked "Accepted" or "Accepted with Comments" by the Engineer. The Contractor, at the sole option of the Engineer, may be considered as having defaulted the contract under the provisions of Section 6-4 DEFAULT BY CONTRACTOR if the changes of the comments are not submitted as required hereinbefore and marked "Accepted" by the Engineer.

6-1.3 Preparation of Schedule Updates and Revisions. The Contractor shall meet with the Engineer during the last week of each month to agree upon each activity's schedule status and shall submit monthly updates of the Baseline Construction Schedule confirming the agreements no later than the fifth working day of the following month. The most recent version shall be provided at each Project Meeting. The monthly update will be submitted on hard (paper) copy and electronic media conforming to Section 6-1.3.3 Electronic Media per the submittal requirements of Section 2-5.3 and will include each item and element of Sections 6-1.2 through 6-1.2.9 and 6-1.3.1 through 6-1.3.7. Acceptable updates to the Baseline Construction shall be a condition of payment.

6-1.3.1 Actual Activity Dates. The actual dates each activity was started and/or completed during the month. After first reporting an actual date, the Contractor shall not change that actual date in later updates without specific notification to the Engineer with the update.

6-1.3.2 Activity Percent Complete. For each activity underway at the end of the month, the Contractor shall report the percentage determined by the Engineer as complete for the activity.

6-1.3.3 Electronic Media. The schedule data disk shall be a CD-ROM, labeled with the project name and number, the Contractor's name and the date of preparation of the schedule data disk. The schedule data disk shall be readable by the software specified in Section 6-1.2.4 "Schedule Software" and shall be free of file locking, encryption or any other protocol that would impede full access of all data stored on it.

6-1.3.4 List of Changes. A list of all changes made to the activities or to the interconnecting logic, with an explanation for each change.

6-1.3.5 Change Orders. Each monthly update will include the addition of the network revisions reflecting the change orders approved in the previous month. The network revisions will be as agreed upon during the review and acceptance of the Contractor's change orders.

6-1.3.6 Bar Chart. Each monthly update will include a chart showing individual tasks and their durations arranged with the tasks on the vertical axis and duration on the horizontal axis. The bar chart shall use differing texture patterns or distinctive line types to show the critical path.

6-1.4 Engineer's Review of Updated Construction Schedule. The Engineer will review and return the Updated Construction Schedule to the Contractor, with any comments, within 5 working days of submittal. The Updated Construction Schedule will be returned marked as per Sections 6-1.4.1 through 6-1.4.3. Any Updated Construction Schedule marked "Accepted with Comments" or "Not Accepted" by the Engineer will be returned to the Contractor for correction. Upon resubmittal the Engineer will review and return the resubmitted Updated Construction Schedule to the Contractor, with any comments, within 5 working days. Failure of the Contractor to submit a monthly updated construction schedule will invoke the same consequences as the Engineer returning a monthly updated construction schedule marked "Not Accepted".

6-1.4.1 "Accepted." The Contractor may proceed with the project work and will receive payment for the schedule in accordance with Section 6-1.8.2.

6-1.4.2 "Accepted with Comments." The Contractor may proceed with the project work. The Contractor must resubmit the Updated Construction Schedule to the Engineer incorporating the corrections and changes noted in the Engineer's comments prior to receipt of payment per Section 6-1.8.2.

6-1.4.3 "Not Accepted." The Contractor must resubmit the Updated Construction Schedule to the Engineer incorporating the corrections and changes noted in the Engineer's comments prior to receipt of payment per Section 6-1.8.2. The Contractor, at the sole option of the Engineer, may be considered as having defaulted the contract under the provisions of Section 6-4 DEFAULT BY CONTRACTOR if the changes of the comments are not submitted and marked "Accepted" by the Engineer before the last day of the month in which the Updated Construction Schedule is due. If the Contractor fails to submit the corrected Updated Construction Schedule as required herein the Contractor may elect to proceed with the project at its own risk. Should the Contractor elect not to proceed with the project, any resulting delay, impact, or disruption to the project will be the Contractor's responsibility.

6-1.5 Late Completion or Milestone Dates. Should the Schedule Update indicate a completion or contractually required milestone date later than the properly adjusted contract or milestone

duration, the Agency may withhold Liquidated Damages for the number of days late. Should a subsequent "Accepted" Schedule Update remove all or a portion of the delay, all or the allocated portion of the previously held Liquidated Damages shall be released in the monthly payment to the Contractor immediately following the "Accepted" schedule.

6-1.6 Interim Revisions. Should the actual or projected progress of the work become substantially different from that depicted in the Project Schedule, independently of and prior to the next monthly update, the Contractor will submit a revised Baseline Construction Schedule, with a list and explanation of each change made to the schedule. The Revised Construction Schedule will be submitted per the submittal requirements of Section 2-5.3 and per the schedule review and acceptance requirements of Section 6-1, including but not limited to the acceptance and payment provisions. As used in this section "substantially different" means a time variance greater than 5 percent of the number of days of duration for the project.

6-1.7 Final Schedule Update. The Contractor shall prepare and submit a final schedule update when one hundred percent of the construction work is completed. The Contractor's Final Schedule Update must accurately represent the actual dates for all activities. The final schedule update shall be prepared and reviewed per Sections 6-1.3 Preparation of Schedule Updates and Revisions and 6-1. 4 Engineer's Review of Updated Construction Schedule. Acceptance of the final schedule update is required for completion of the project and release of any and all funds retained per Section 9-3.2.

6-1.8 Measurement and Payment. The Contractor's preparation, revision and maintenance of the Construction Schedule are incidental to the work and therefore, no separate payment will be made.

6-2 PROSECUTION OF WORK.

To minimize public inconvenience and possible hazard and to restore street and other work areas to their original condition and state of usefulness as soon as practicable, the Contractor shall diligently prosecute the Work to completion. If the Engineer determines that the Contractor is failing to prosecute the Work to the proper extent, the Contractor shall, upon orders from the Engineer, immediately take steps to remedy the situation. All costs of prosecuting the Work as described herein shall be included in the Contractor's Bid. Should the Contractor fail to take the necessary steps to fully accomplish said purposes, after orders of the Engineer, the Engineer may suspend the work in whole or part, until the Contractor takes said steps.

As soon as possible under the provisions of the Specifications, the Contractor shall backfill all excavations and restore to usefulness all improvements existing prior to the start of the Work.

If Work is suspended through no fault of the Agency, all expenses and losses incurred by the Contractor during such suspensions shall be borne by the Contractor. If the Contractor fails to properly provide for public safety, traffic, and protection of the Work during periods of suspension, the Agency may elect to do so, and deduct the cost thereof from monies due the Contractor. Such actions will not relieve the Contractor from liability.

6-2.1 Order of Work.

The work to be done shall consist of furnishing all labor, equipment and materials, and performing all operations necessary to complete the Project Work as shown on the Project Plans and as specified in the Specifications. The work includes: traffic control; excavation safety measures;

removal of existing valves, appurtenances, and piping; installation of new valves and piping; and restoration of finished street surface to original or better condition.

Specific sequencing constraints are summarized in Section 6-7.

6-2.3 Project Meetings. The Engineer will establish the time and location of weekly Project Meetings. The Contractor's Representative and any key subcontractors shall attend each Project Meeting. The Project Representative shall be the individual determined under Section 7-6, "The Contractor's Representative". No separate payment for attendance of the Contractor, the Contractor's Representative or any other employee or subcontractor or subcontractor's employee at these meetings will be made. The Contractor shall provide the most recent construction schedule and 3-week look ahead update at each Project Meeting. The Contractor shall make the red-line record drawings available for the Engineer's review at each Project Meeting.

6-3 SUSPENSION OF WORK.

6-3.1 General. The Work may be suspended in whole or in part when determined by the Engineer that the suspension is necessary in the interest of the Agency. The Contractor shall comply immediately with any written order of the Engineer. Such suspension shall be without liability to the Contractor on the part of the Agency except as otherwise specified in Section 6-6.3.

6-3.2 Archaeological and Paleontological Discoveries. If discovery is made of items of archaeological or paleontological interest, the Contractor shall immediately cease excavation in the area of discovery and shall not continue until ordered by the Engineer. When resumed, excavation operations within the area of discovery shall be as directed by the Engineer.

Discoveries which may be encountered may include, but not be limited to, dwelling sites, stone implements or other artifacts, animal bones, human bones, and fossils.

The Contractor shall be entitled to an extension of time and compensation in accordance with the provisions of Section 6-6.

6-4 DEFAULT BY CONTRACTOR. If the Contractor fails to begin delivery of material and equipment, to commence the Work within the time specified, to maintain the rate of delivery of material, to execute the Work in the manner and at such locations as specified, or fails to maintain the Work schedule which will insure the Agency's interest, or, if the Contractor is not carrying out the intent of the Contract, the Agency may serve written notice upon the Contractor and the Surety on its Faithful Performance Bond demanding satisfactory compliance with the Contract.

The Contract may be canceled by the Board without liability for damage, when in the Board's opinion the Contractor is not complying in good faith, has become insolvent, or has assigned or subcontracted any part of the Work without the Board's consent. In the event of such cancellation, the Contractor will be paid the actual amount due based on Contract Unit Prices or lump sums bid and the quantity of the Work completed at the time of cancellation, less damages caused to the Agency by acts of the Contractor. The Contractor, in having tendered a Bid, shall be deemed to have waived any and all claims for damages because of cancellation of Contract for any such reason. If the Agency declares the Contract canceled for any of the above reasons, written notice to that effect shall be served upon the Surety. The Surety shall, within five (5) days, assume control and perform the Work as successor to the Contractor.

If the Surety assumes any part of the Work, it shall take the Contractor's place in all respects for that part and shall be paid by the Agency for all work performed by it in accordance with the Contract. If the Surety assumes the entire Contract, all money due the Contractor at the time of its default shall be payable to the Surety as the Work progresses, subject to the terms of the Contract.

If the Surety does not assume control and perform the Work within 5 days after receiving notice of cancellation, or fails to continue to comply, the Agency may exclude the Surety from the premises. The Agency may then take possession of all material and equipment and complete the Work by Agency forces, by letting the unfinished Work to another Contractor, or by a combination of such methods. In any event, the cost of completing the Work shall be charged against the Contractor and its Surety and may be deducted from any money due or becoming due from the Agency. If the sums due under the Contract are insufficient for completion, the Contractor or Surety shall pay to the Agency within 5 days after the completion, all costs in excess of the sums due.

The provisions of this section shall be in addition to all other rights and remedies available to the Agency under law.

6-5 TERMINATION OF CONTRACT. The Board may terminate the Contract at its own discretion or when conditions encountered during the Work make it impossible or impracticable to proceed, or when the Agency is prevented from proceeding with the Contract by act of God, by law, or by official action of a public authority.

6-6 DELAYS AND EXTENSIONS OF TIME.

6-6.1 General. If delays are caused by unforeseen events beyond the control of the Contractor, such delays will entitle the Contractor to an extension of time as provided herein, but the Contractor will not be entitled to damages or additional payment due to such delays, except as provided in 6-6.3. Such unforeseen events may include: war, government regulations, labor disputes, strikes, fires, floods, adverse weather or elements necessitating cessation of work, inability to obtain materials, labor or equipment, required extra work, or other specific events as may be further described in the Specifications.

No extension of time will be granted for a delay caused by the Contractor's inability to obtain materials unless the Contractor furnishes to the Engineer documentary proof. the proof must be provided in a timely manner in accordance with the sequence of the Contractor's operations and the approved construction schedule.

If delays beyond the Contractor's control are caused by events other than those mentioned above, the Engineer may deem an extension of time to be in the best interests of the Agency. The Contractor will not be entitled to damages or additional payment due to such delays, except as provided in Section 6-6.3.

If delays beyond the Contractor's control are caused solely by action or inaction by the Agency, such delays will entitle the Contractor to an extension of time as provided in Section 6-6.2.

6-6.2 Extensions of Time. Extensions of time, when granted, will be based upon the effect of delays to the Work. They will not be granted for noncontrolling delays to minor portions of the Work unless it can be shown that such delays did or will delay the progress of the Work.

6-6.3 Payment for Delays to Contractor. The Contractor will be compensated for damages incurred due to delays for which the Agency is responsible. Such actual costs will be determined by the Engineer. The Agency will not be liable for damages which the Contractor could have avoided by any reasonable means, such as judicious handling of forces, equipment, or plant. The determination of what damages the Contractor could have avoided will be made by the Engineer.

6-6.4 Written Notice and Report. The Contractor shall provide written notice to the Engineer within two hours of the beginning of any period that the Contractor has placed any workers or equipment on standby for any reason that the Contractor has determined to be caused by the Agency or by any organization that the Agency may otherwise be obligated by. The Contractor shall provide continuing daily written notice to the Engineer, each working day, throughout the duration of such period of delay. The initial and continuing written notices shall include the classification of each workman and supervisor and the make and model of each piece of equipment placed on standby, the cumulative duration of the standby, the Contractor's opinion of the cause of the delay and a cogent explanation of why the Contractor could not avoid the delay by reasonable means. Should the Contractor fail to provide the notice(s) required by this section the Contractor agrees that no delay has occurred and that it will not submit any claim(s) therefore.

6-7 TIME OF COMPLETION.

6-7.1 General. The Contractor shall complete the Work within the time set forth in the Contract. The Contractor shall complete each portion of the Work within such time as set forth in the Contract for such portion. The time of completion of the Contract shall be expressed in working days. The Contractor shall diligently prosecute the work to completion within 250 working days after the starting date specified in the Notice to Proceed.

6-7.2 Working Day.
A working day is any day within the period between the start of the Contract time as defined in Section 6-1 and the date provided for completion other than:

1. Saturday,
2. Sunday,
3. any day designated as a holiday by the Agency,
4. any other day designated as a holiday in a Master Labor Agreement entered into by the Contractor or on behalf of the Contractor as an eligible member of a contractor association,
5. any day the Contractor is prevented from working at the beginning of the workday for cause as defined in Section 6-6.1,
6. any day the Contractor is prevented from working during the first 5 hours with at least 60 percent of the normal work force for cause as defined in Section 6-6.1.

In addition to Agency holidays, open excavations and shutdowns will not be allowed on the day prior to Thanksgiving and between December 23 and January 1.

Shutdowns will not be allowed on Mondays and Fridays.

Unless otherwise approved in writing by the Engineer, the hours of work shall be between the hours of 7:00 a.m. and 4:00 p.m. on Mondays through Fridays, excluding Agency holidays.

The Contractor shall obtain the written approval of the Engineer if the Contractor desires to work outside said hours or at any time during weekends and/or holidays. This written permission must

be obtained at least 48 hours prior to such work. The Engineer may approve work outside the hours and/or days stated herein when, in his/her sole opinion, such work conducted by the Contractor is beneficial to the best interests of the Agency. The Contractor shall pay the inspection costs of such work.

The Contractor shall not muster or conduct other preparatory efforts that could impact residents/businesses in the vicinity before 7:00 am or after 4:00 pm on Mondays through Fridays, excluding Agency holidays.

Work at the following sites shall be scheduled during the times indicated. The Contractor shall incorporate the dates and areas in this section in the Construction Schedule required by Section 6.1. No additional payment, adjustment of bid prices or adjustment of contract time of completion will be allowed as a consequence of the prohibition of work being performed within the dates, areas and/or types of work prohibited in this section.

Night work shall be defined as the following:

1. Sunday night at 9 p.m. through Friday morning at 6 a.m.
    a. Preparatory work between the hours of 9 p.m. to 10 p.m.;
    b. Active construction work between the hours of 10 p.m. to 5 a.m.; and
    c. Demobilization/clean-up between the hours of 5 a.m. to 6 a.m.
2. Excludes Agency holidays.

For work designated to occur during a School Break, it is the Contractor's responsibility to verify the latest official school summer and holiday schedule from respective school district.

Site	Required Construction Time	Prep Work Constraints	Shutdown Constraints
1. Paseo Candelero and Via Candrejo	No constraints	Day	Day
2. Walnut Ave. and Garfield St	No constraints	Day	Day
3. Palomar Airport Rd. and Camino Vida Roble	No constraints	Night work	Night work
4. Magnolia Ave. and Monroe St.	School break	Day	Day
5. The Shoppes at Carlsbad	No constraints	Day	Day unless valves don't hold and shutdown area has to be extended and affects businesses; then night work required
6. Estrella De Mar Ct.	No constraints	Day – working in a driveway, need flaggers	Day
7. Estrella De Mar Rd. and Caracol Ct.	No constraints	Day	Day - Concurrent shut down with Site 8
8. Estrella De Mar Rd. and Mar Azul Way	No constraints	Day	Day - Concurrent shut down with Site 7
9. Pine Ave. and Harding St.	No constraints	Day	Day – Concurrent shut down with Site 10
10. Pine Ave. and Jefferson St.	No constraints	Day – have to provide portable toilets at Senior Center/Community Center	Day – Concurrent shut down with Site 9
11. Pine Ave. and Madison St.	Has to be done after Site 9 is completed; wait a few weeks in between	Day	Day
12. Hibiscus Cir. and Tamarack Ave.	No constraints	Day	Concurrent shut down with Site 13
13. Tamarack Ave. and Nautical Dr.	No constraints	Day	Concurrent shut down with Site 12
14. Buena Vista Way and Highland Dr.	School break	Day	Day
15. Carlsbad Village Dr.	Not June 1 – Sept 6 (Labor Day)	Night	Night work
16. Daisy Ave. and Batiquitos Dr.	After Site 17; wait a few weeks in between	Day	Day
17. Poppy Ln. and Batiquitos Dr.	No constraints	Day	Day – Concurrent shutdown with Site 19
18. Poppy Ln.	After sites 17 & 19; wait a few weeks in between	Day	Day
19. Poppy Ln. and Azalea Pl.	No constraints	Day	Day – concurrent shut down with Site 17
20. Begonia Ct. and Azalea Pl.	After Site 19	Day	Day

6-7.3 Construction Sequencing and Constraints

1. All construction activities shall meet the scheduling restrictions identified in the summary table (previous page).
2. Potholing reports for each site shall be submitted at least 3 weeks prior to excavation.
3. Shutdown request form E-28 must be submitted at least 2 weeks prior to desired shutdown date.
4. The progress of the Work shall be limited to two crews at two sites with active excavation at any given time. Each active excavation site must have a dedicated crew.
5. Contractor shall submit a Site Specific Work Plan (See Appendix B) detailed work plan for each site. Work plan shall include all labor, material, and equipment to complete the work. Additionally, the work plan shall detail an hour-by-hour account of the Contractor's work plan.
6. Each non-active excavation must be backfilled or securely shored.
7. Perform water service to switch over so that no customer is without water for longer than 8 hours. If planned shutdown duration exceeds 8 hours, contractor is to provide highlining and submit highline plan for district approval.
8. All steel plates must be traffic rated and recessed per section 306-1.
9. Each excavation shall immediately be lined with plastic and have a ¾" rock bed with sump pump for dewatering.
10. At least 1 working day prior to shutdown:
    a. All underground utilities and pipe diameters shall be verified in the presence of the Inspector;
    b. All dewatering shall be functioning and demonstrated to the Inspector;
    c. Prior to assembling any valves, all valves to be installed shall be closed in the presence of the Inspector. The number of turns to close shall be verified against the anticipated number in the submittal and any deviations noted in the asset schedule; and
    d. All fitting shall be assembled to the greatest extent possible, and the Inspector shall inspect the assembly.
11. Thrust blocks shall be completed demolished at the same time as the shutdown in order to accommodate improvements.
12. Asbestos cement pipe testing shall be completed on each stick of pipe removed in accordance with Technical Specification 02262.
13. Existing valves removed shall be tagged and transported to Agency's office, at the cost of the Contractor, per Section 5-3.
14. Shutdown shall occur within 3 working days of initial site excavation.
15. Each site shall be fully restored with 5 working days of shutdown.
16. Each site shall be backfilled and base paved within 3 working days of energizing the line.

Work for each site shall be sequenced and scheduled during the times indicated on the table in Section 6-7.2. The Contractor shall incorporate the constraints into the bid price and in the Construction Scheduled required by Section 6.1. No additional payment, adjustment of bid prices or adjustment of contract time of completion will be allowed as a consequence of the prohibition of work being performed within the dates, areas and/or types of work prohibited in this section.

6-7.4 Contract Time Accounting. The Engineer will make a daily determination of each working day to be charged against the Contract time. These determinations will be discussed and the Contractor will be furnished a periodic statement showing allowable number of working days of Contract time, as adjusted, at the beginning of the reporting period. The statement will also indicate the number of working days charged during the reporting period and the number of working days of Contract time remaining. If the Contractor does not agree with the statement, it shall file

a written protest within 15 days after receipt, setting forth the facts of the protest. Otherwise, the statement will be deemed to have been accepted.

6-8 COMPLETION, ACCEPTANCE, AND WARRANTY.

6-8.1 Site Walk-Through. After each site has been fully restored, the Inspector will then schedule the Site Walk-Through to occur within the next five working days.

The Contractor and Inspector shall be present at each Site Walk-Through and all outstanding deficiencies shall be included in a List of Deficiencies. The Engineer, Agency, and Construction Manager reserve the right to join at each Site Walk-Through.

A review of the red-line record drawings and asset schedule for the respective site shall also be completed at the Site Walk-Through and all red-line deficiencies will also be included in the List of Deficiencies for that site.

6-8.2 List of Deficiencies. Following each Site Walk-Through, the Inspector will generate the List of Deficiencies (also known as the punchlist) for that site, within five working days. The Contractor shall then have ten (10) working days to address the List of Deficiencies and provide a written response to each punchlist item.

6-8.3 Site Follow-Up Walk-Through. Upon receipt of written responses to each site's List of Deficiencies, the Inspector will complete a Site Follow-Up Walk-Through. Any outstanding deficiencies will be noted and returned to Contractor. Outstanding deficiencies will delay full payment of that site's bid items.

6-8.4 Request for Final Walk-Through. Once the Contractor asserts they have satisfied the terms of the Contract and with the Inspector's permission, the Contractor may submit written assertion in the form of a Request for Final Walk-Through, certifying that all deficiencies identified through the Site Walk-Through process have been addressed and request a Final Inspection to demonstrate project completion to the entire Agency. The Contractor shall provide an attachment to the Request for Final Inspection with the Contractor's written response to each deficiency. The Request for Final Inspection shall not be considered complete without the Contractor's written response to each deficiency.

6-8.5 Final Walk-Through. Upon receipt of the Request for Final Walk-Through, the Inspector shall schedule the Final Inspection within ten (10) working days. The Inspector and Contractor shall be present at the final inspection. Representatives from other Agency departments reserve the right to be present at the Final Inspection. The Engineer and Construction Manager reserve the right to be present at the Final Inspection. The red-line record drawings and asset schedules shall also be inspected. If any deficiencies are not satisfactorily addressed or additional deficiencies are identified, the Contractor will have ten (10) working days to address List of Deficiencies.

6-8.6 Request for Completion. The Engineer will not accept the Work or any portion of the Work before all of the Work is completed and all outstanding deficiencies that may exist are corrected by the Contractor and the Engineer is satisfied that all the materials and workmanship, and all other features of the Work, meet the requirements of all of the specifications for the Work.

Once the Final Inspection has been completed and all outstanding deficiencies satisfactorily completed to Agency’s approval, the Contractor shall submit a written assertion in the form of Request for Completion letter, certifying that the Work has been completed.

6-8.7 Completion. Upon receipt of the Request for Completion letter, the Agency shall review the written assertion within 2 business days. If, in the Engineer's judgment, the Work has been completed in accordance with the Contract Documents, the Engineer will issue a Completion Letter.

The date of completion shall be the date that the Completion Letter is issued by the Agency, conditional upon the Contractor demobilizing and ceasing all on-site labor within two business days. If the Contractor does not fully demobilizes and cease on-site labor accordingly, the Agency may revise the date of Completion to be the date which the Contractor has fully demobilized and has ceased all on-site labor.

The completion date will be the date to which liquidated damages will be computed.

Use, temporary, interim or permanent, of all, or portions of, the Work does not constitute completion or acceptance of the Work.

6-8.8 Acceptance. Acceptance will occur after all of the requirements contained in the Contract Documents have been fulfilled. If, in the Engineer's judgment, the Contractor has fully performed the Contract, the Engineer will so certify to the Board. Upon such certification by the Engineer, the Board may accept the Work. Upon the Board's acceptance of the Work, the Agency will cause a "Notice of Completion" to be filed in the office of the San Diego County Recorder. The date of recordation shall be the date of acceptance of the Work.

6-8.9 Warranty. All work shall be warranted for one (1) year after acceptance of the Work and any faulty work or materials discovered during the warranty period shall be repaired or replaced by the Contractor, at its expense. Twenty-five percent of the faithful performance bond shall be retained as a warranty bond for the one-year warranty period. The Contractor shall replace or repair any such defective work in a manner satisfactory to the Engineer, after notice to do so from the Engineer, and within the time specified in the notice. If the Contractor fails to make such replacement or repairs within the time specified in the notice, the Agency may perform this work and the Contractor's sureties shall be liable for the cost thereof.

6-9 LIQUIDATED DAMAGES. Failure of the Contractor to complete the Work within the time allowed will result in damages being sustained by the Agency. For each consecutive calendar day in excess of the time specified for completion of Work, as adjusted in accordance with Section 6-6, the Contractor shall pay the Agency, or have withheld monies due it, the sum of Two Thousand Five Hundred Dollars ($2,500.00) Such sum is liquidated damages and shall not be construed as a penalty, and may be deducted from payments due the Contractor if such delay occurs.

Execution of the Contract shall constitute agreement by the Agency and Contractor that two thousand five hundred dollars per day is the minimum value of costs and actual damages caused by the Contractor to complete the Work within the allotted time. Any progress payments made after the specified completion date shall not constitute a waiver of this paragraph or of any damages.

With respect to the public right-of-way, failure of the Contractor to restore and open all travel lanes within designated working hours shall result in damages being sustained by the Agency. For every 15-minute increment (or portion of time thereof) beyond the hours of work stated in the Contract Documents or superseded by the approved traffic control plans, the Contractor shall pay to the Agency, or have monies due to it, the sum of One Thousand Dollars ($1,000). Such sum is liquidated damages and shall not be construed as a penalty and will be deducted from monthly progress payments due the Contractor if such delay occurs.

6-10 USE OF IMPROVEMENT DURING CONSTRUCTION. The Agency reserves the right to take over and utilize all or part of any completed facility or appurtenance. The Contractor will be notified in writing in advance of such action. Such action by the Agency will relieve the Contractor of responsibility for injury or damage to said completed portions of the improvement resulting from use by public traffic or from the action of the elements or from any other cause, except Contractor operations or negligence. The Contractor will not be required to reclean such portions of the improvement before completion, except for cleanup made necessary by its operations. Nothing in this section shall be construed as relieving the Contractor from full responsibility for correcting defective work or materials.

In the event the Agency exercises its right to place into service and utilize all or part of any completed facility or appurtenance, the Agency will assume the responsibility and liability for injury to persons or property resulting from the utilization of the facility or appurtenance so placed into service, except for any such injury to persons or property caused by any willful or negligent act or omission by the Contractor, Subcontractor, their officers, employees, or agents.

SECTION 7 – RESPONSIBILITIES OF THE CONTRACTOR

7-1 CONTRACTOR'S EQUIPMENT AND FACILITIES. The Contractor shall furnish and maintain in good condition all equipment and facilities as required for the proper execution and inspection of the Work. Such equipment and facilities shall meet all requirements of applicable ordinances and laws.

7-2 LABOR.

7-2.1 General. Only competent workers shall be employed on the Work. Any person employed who is found to be incompetent, intemperate, troublesome, disorderly, or otherwise objectionable, or who fails or refuses to perform work properly and acceptably, shall be immediately removed from the Work by the Contractor and not be reemployed on the Work.

7-2.2 Laws. The Contractor, its agents, and employees shall be bound by and comply with applicable provisions of the Labor Code and Federal, State, and local laws related to labor.

The Contractor shall strictly adhere to the provisions of the Labor Code regarding minimum wages; the 8-hour day and 40-hour week; overtime; Saturday, Sunday, and holiday work; and nondiscrimination because of race, color, national origin, sex, or religion. The Contractor shall forfeit to the Agency the penalties prescribed in the Labor Code for violations.

In accordance with the Labor Code, the Board has on file and will publish a schedule of prevailing wage rates for the types of work to be done under the Contract. The Contractor shall not pay less than these rates.

Each worker shall be paid subsistence and travel as required by the collective bargaining agreement on file with the State of California Department of Industrial Relations.

The Contractor's attention is directed to Section 1776 of the Labor Code which imposes responsibility upon the Contractor for the maintenance, certification, and availability for inspection of such records for all persons employed by the Contractor or Subcontractor in connection with the project. The Contractor shall agree through the Contract to comply with this Section and the remaining provisions of the Labor Code.

7-3 LIABILITY INSURANCE. Insurance shall be required as specified in section 10 of the Public Works Contract.

The cost of this insurance shall be included in the Contractor's Bid.

7-4 WORKERS' COMPENSATION INSURANCE. Before execution of the Contract by the Board, the Contractor shall file with the Engineer the following signed certification:

> "I am aware of the provisions of Section 3700 of the Labor Code which require every employer to be insured against liability for workers' compensation or to undertake self-insurance in accordance with the provisions of that code, and I will comply with such provisions before commencing the performance of the work of this contract."

The Contractor shall also comply with Section 3800 of the Labor Code by securing, paying for, and maintaining in full force and effect for the duration of the contract, complete Workers' Compensation Insurance, and shall furnish a Certificate of Insurance to the Engineer before execution of the Contract. The Agency, its officers, or employees, will not be responsible for any claims in law or equity occasioned by failure of the Contractor to comply with this paragraph.

All compensation insurance policies shall bear an endorsement or shall have attached a rider whereby it is provided that, in the event of expiration or proposed cancellation of such policies for any reason whatsoever, the Agency shall be notified by registered mail not less than 30 days before expiration or cancellation is effective.

All insurance is to be placed with insurers that are admitted and authorized to conduct business in the state of California and are listed in the official publication of the Department of Insurance of the State of California. Policies issued by the State Compensation Fund meet the requirement for workers' compensation insurance.

7-5 PERMITS. Except as specified herein the Contractor will obtain, at no cost to the Contractor all City of Carlsbad encroachment, right-of-way, grading and building permits necessary to perform work for this contract on Agency property, streets, or other rights-of-way. Contractor shall not begin work until all permits incidental to the work are obtained. The Contractor shall obtain and pay for all permits for the disposal of all materials removed from the project. The cost of said permit(s) shall be included in the price bid for the appropriate bid item and no additional compensation will be allowed therefore. The Contractor shall obtain and pay for all costs incurred for permits necessitated by its operations such as, but not limited to, those permits required for night work, overload, blasting, and demolition. For private contracts, the Contractor shall obtain all permits incidental to the Work or made necessary by its operations, and pay all costs incurred by the permit requirements.

The Contractor shall pay all business taxes or license fees that are required for the work.

7-5.1 Resource Agency Permits. No resource agency permits are required for the Work.

7-5.2 Relations with the Railroad.

7-5.2.1 General. The Contractor shall cooperate with the North County Transit District (NCTD), the Burlington Northern and Santa Fe Railway (BNSF) and the National Railway Passenger Corporation (AMTRAK), herein after collectively referred to as Railroad. It is understood the Railroad shall have absolute authority and right to cause the Contractor's work on the Railroad Property to cease. Though it is not anticipated to complete this work, this section is left in the contract document as Site 15 (Carlsbad Village Drive) is in proximity to rail crossing.

7-5.2.2 Right of Entry Permit. It shall be the responsibility of the Contractor to obtain a "Right of Entry" Permit from the North County Transit District Board, (NCTD) should they enter their right of way or have potential to impact the NCTD foul area. All fees and costs associated with obtaining and complying with the terms of this permit, including but not limited to engineering review, submittal review, railway flaggers and construction inspection, shall be the responsibility of the Contractor, and no other payment will be allowed, except as specified herein.

All fees and costs associated with obtaining and complying with the terms of the Right of Entry permit shall be the responsibility of the Contractor. Payment to the Contractor for all costs

associated with obtaining and complying with the Right of Entry permit shall be considered as included in various items of work and no additional compensation will be allowed therefore. All fees and costs associated with obtaining and complying with the terms of this permit, including but not limited to engineering review, submittal review, railway flaggers and construction inspection, shall be the responsibility of the Contractor, and no other payment will be allowed, except as specified herein. The Contractor after receipt of the Right of Entry Permit approved by the Board shall furnish the Engineer with two copies of the executed Right of Entry permit.

7-5.2.3 Railroad Requirements. The Contractor shall notify NCTD in writing at least six (6) weeks prior to commencement of work on Railroad Right of Way at:

North County Transit District
810 Mission Avenue
Oceanside, CA 92504
(760) 966-6504
(760) 754-9403 FAX

The details of construction, including proposed method of setup to perform the work shall be submitted to the railroad for approval and shall not be undertaken without approval and shall not be undertaken until approval by the Railroad is given.

All persons entering into the railroad right of way will be required to attend a preconstruction Railroad Safety Training course conducted by NCTD. No additional compensation to Contractor will be allowed for attendance at a Railroad Safety Training course.

7-5.2.4 Requirements for use of Railway Flaggers. The presence of equipment, materials, or manpower will not be allowed within 25 feet of the centerline of any track without the presence of Railway Flaggers. The Contractor shall be responsible for coordination with NCTD to schedule Railway Flaggers. Costs for Railway Flaggers shall be the responsibility of the Contractor and subtracted from the deposit made to NCTD.

7-6 THE CONTRACTOR'S REPRESENTATIVE. At the time of Bid the Contractor shall designate in writing a representative who shall have complete authority to act for it. Refer to bid documents for qualifications. An alternative representative may be designated as well. The representative or alternate shall be present at the Work site whenever work is in progress or whenever actions of the elements necessitate its presence to take measures necessary to protect the Work, persons, or property. Any order or communication given to this representative shall be deemed delivered to the Contractor. A joint venture shall designate only one representative and alternate. In the absence of the Contractor or its representative, instructions or directions may be given by the Engineer to the superintendent or person in charge of the specific work to which the order applies. Such order shall be complied with promptly and referred to the Contractor or its representative.

In order to communicate with the Agency, the Contractor's representative, superintendent, or person in charge of specific work shall be able to speak, read, and write the English language.

The qualifications for the Contractor's Representative shall include at a minimum:

a. Submit resume and complete qualifications form demonstrating 5 years of experience as superintendent of potable water projects, with at least five projects with contract values specific to potable water improvements over $500,000.

b. Completion of OSHA 30-hour Construction Training Course. Submit certification as proof.

CMWD reserves the right to disqualify bidders if the required technical ability and experience for the Contractor's Representative is not established.

In the event that the Contractor would like to change the Contractor's Representative through the course of Project completion, Contractor shall notify the Agency at least two weeks prior and submit it the same paperwork for the Engineer's review demonstrating the proposed Contractor's Representative meets the minimum requirements of the position. Engineer will review qualifications of proposed Contractor's Representative within 5 working days of receipt.

In the event of a change in Contractor's Representative, CMWD reserves the right to suspend work, at the Contractor's cost, until a qualified Contractor's Representative is assigned to the Project. An alternative representative may be designated as well. Prior to an alternative being designated, the proposed alternative must also submit paperwork for Agency's review, demonstrating that the proposed alternative satisfies the minimum qualifications. The Agency will review the qualifications within five working days of receipt. The representative or alternate shall be present at the Work site whenever work is in progress or whenever actions of the elements necessitate its presence to take measures necessary to protect the Work, persons, or property. Any order or communication given to this representative shall be deemed delivered to the Contractor. A joint venture shall designate only one representative and alternate. In the absence of the Contractor or its representative, instructions or directions may be given by the Engineer to the superintendent or person in charge of the specific work to which the order applies. Such order shall be complied with promptly and referred to the Contractor or its representative.

No change in Contractor's Representative will be allowed without Agency's review of qualifications of proposed Contractor's Representative. In the event of a change in Contractor's Representative, the minimum qualifications for Contractor's Representative must still be satisfied. The qualifications shall be submitted for review two weeks prior to the proposed change in personnel.

7-7 COOPERATION AND COLLATERAL WORK. The Contractor shall be responsible for ascertaining the nature and extent of any simultaneous, collateral, and essential work by others. The Agency, its workers and contractors and others, shall have the right to operate within or adjacent to the Work site during the performance of such work.

The Agency, the Contractor, and each of such workers, contractors and others, shall coordinate their operations and cooperate to minimize interference.

The Contractor shall include in its Bid all costs involved as a result of coordinating its work with others. the Contractor will not be entitled to additional compensation from the Agency for damages resulting from such simultaneous, collateral, and essential work. If necessary to avoid or minimize such damage or delay, the Contractor shall redeploy its work force to other parts of the Work.

Should the Contractor be delayed by the Agency, and such delay could not have been reasonably foreseen or prevented by the Contractor, the Engineer will determine the extent of the delay, the effect on the project, and any extension of time.

7-7.1 Coordination. The Contractor shall coordinate and cooperate with all the utility companies during the relocation or construction of their lines. The Contractor may be granted a time

extension if, in the opinion of the Engineer, a delay is caused by the utility company. No additional compensation will be made to the Contractor for any such delay.

7-8 PROJECT SITE MAINTENANCE.

7-8.1 Cleanup and Dust Control. Throughout all phases of construction, including suspension of work, and until the final acceptance, the Contractor shall keep the site clean and free from rubbish and debris. The Contractor shall also abate dust nuisance by cleaning, sweeping and sprinkling with water, or other means as necessary. The use of water resulting in mud on public streets will not be permitted as a substitute for sweeping or other methods.

When required by the Plans or Specifications, the Contractor shall furnish and operate a self-loading motor sweeper with spray nozzles at least once each working day for the purpose of keeping paved areas acceptably clean wherever construction, including restoration, is incomplete.

Materials and equipment shall be removed from the site as soon as they are no longer necessary. Before the final inspection, the site shall be cleared of equipment, unused materials, and rubbish so as to present a satisfactory clean and neat appearance. All cleanup costs shall be included in the Contractor's Bid.

Care shall be taken to prevent spillage on haul routes. Any such spillage shall be removed immediately and the area cleaned.

Excess excavation material from catch basins or similar structures shall be removed from the site immediately. Sufficient material may remain for use as backfill if permitted by the Specifications. Forms and form lumber shall be removed from the site as soon as practicable after stripping.

Failure of the Contractor to comply with the Engineer's cleanup orders may result in an order to suspend work until the condition is corrected. No additional compensation will be allowed as a result of such suspension.

Cleanup and dust control required herein shall also be executed on weekends and other non-working days when needed to preserve the health safety or welfare of the public. The Contractor shall conduct effective cleanup and dust control throughout the duration of the Contract. The Engineer may require increased levels of cleanup and dust control that, in his/her sole discretion, are necessary to preserve the health, safety and welfare of the public. Cleanup and dust control shall be considered incidental to the items of work that they are associated with and no additional payment will be made therefore.

7-8.2 Air Pollution Control. The Contractor shall not discharge smoke, dust, or any other air contaminants into the atmosphere in such quantity as will violate the regulations of any legally constituted authority.

7-8.3 Vermin Control. At the time of acceptance, structures entirely constructed under the Contract shall be free of rodents, insects, vermin, and pests. Necessary extermination work shall be arranged and paid for by the Contractor as part of the Work within the Contract time and shall be performed by a licensed exterminator in accordance with requirements of governing authorities. The Contractor shall be liable for injury to persons or property and responsible for the elimination of offensive odors resulting from extermination operations.

7-8.4 Sanitation. The Contractor shall provide and maintain enclosed toilets for the use of employees engaged in the Work. These accommodations shall be maintained in a neat and sanitary condition. They shall also comply with all applicable laws, ordinances, and regulations pertaining to public health and sanitation of dwellings and camps.

Wastewater shall not be interrupted. Should the Contractor disrupt existing sewer facilities, sewage shall be conveyed in closed conduits and disposed of in a sanitary sewer system. Sewage shall not be permitted to flow in trenches or be covered by backfill.

7-8.5 Temporary Light, Power, and Water. The Contractor shall furnish, install, maintain, and remove all temporary light, power, and water at its own expense. These include piping, wiring, lamps, and other equipment necessary for the Work. The Contractor shall not draw water from any fire hydrant (except to extinguish a fire), without obtaining permission from the water agency concerned. The Contractor shall obtain a construction meter for water used for the construction, plant establishment, maintenance, cleanup, testing and all other work requiring water related to this contract. The Contractor shall contact the appropriate water agency for requirements. The Contractor shall pay all costs of temporary light, power and water including hookup, service, meter and any, and all, other charges, deposits and/or fees therefore. Said costs shall be considered incidental to the items of work that they are associated with and no additional payment will be made therefore.

7-8.6 Water Pollution Control. The Contractor shall exercise every reasonable precaution to protect channels, storm drains, and bodies of water from pollution. It shall conduct and schedule operations so as to minimize or avoid muddying and silting of said channels, drains, and waters. Water pollution control work shall consist of constructing those facilities which may be required to provide prevention, control, and abatement of water pollution.

The Contractor shall comply with the California State Water Resources Control Board (SWRCB) Order Number 99-08-DWQ, National Pollutant Discharge Elimination System (NPDES) General Permit Number CAS000002, Waste Discharge Requirements (WDR's) for Discharges of Stormwater Runoff associated with Construction Activity (General Permit) and subsequent adopted modifications and with all requirements of the Storm Water Pollution Prevention and Monitoring Plans for this project in accordance with these regulations.

7-8.7 Drainage Control. The Contractor shall maintain drainage within and through the work areas. Earth dams will not be permitted in paved areas. Temporary dams of sandbags, asphaltic concrete, or other acceptable material will be permitted when necessary. Such dams shall be removed from the site as soon as their use is no longer necessary.

7-8.8 Noise Control. All internal combustion engines used in the construction shall be equipped with mufflers in good repair when in use on the project with special attention to the City Noise Control Ordinance, Carlsbad Municipal Code Chapter 8.48.

7-9 PROTECTION AND RESTORATION OF EXISTING IMPROVEMENTS. The Contractor shall be responsible for the protection of public and private property adjacent to the Work and shall exercise due caution to avoid damage to such property.

The Contractor shall repair or replace all existing improvements within the right-of-way which are not designated for removal (e.g., curbs, sidewalks, driveways, fences, trees, walls, signs, utility installations, pavement, structures, etc.) which are damaged or removed as a result of its operations. When a portion of a sprinkler system within the right-of-way must be removed, the remaining

lines shall be capped. Repairs and replacements shall be at least equal to existing improvements and shall match them in finish and dimension.

Maintenance of street and traffic signal systems that are damaged, temporarily removed or relocated shall be done in conformance with 307-1.5.

Trees, lawns, and shrubbery that are not to be removed shall be protected from damage or injury. If damaged or removed due to Contractor's operations, they shall be restored or replaced in as nearly the original condition and location as is reasonably possible. Lawns shall be reseeded and covered with suitable mulch.

The Contractor shall give reasonable notice to occupants or owners of adjacent property to permit them to salvage or relocate plants, trees, fences, sprinklers, and other improvements, within the right-of-way which are designated for removal and would be destroyed because of the Work.

For each of the sites, the Contractor shall submit proposed protection measures and restoration plans within 30 calendar days of the NTP for each of the following areas. For protection plans, delineate anticipated extent of damage and protection measures. For restoration plan, include anticipated restoration needs, such as product data and figure detailing location of restoration needs.

All costs to the Contractor for protecting, removing, and restoring existing improvements shall be included in the Bid, and meet the requirements of the Carlsbad Engineering Standards.

7-10 PUBLIC CONVENIENCE AND SAFETY.

7-10.1 Traffic and Access. The Contractor's operations shall cause no unnecessary inconvenience. The access rights of the public shall be considered at all times. Unless otherwise authorized, traffic shall be permitted to pass through the Work, or an approved detour shall be provided.

Safe and adequate pedestrian and vehicular access shall be provided and maintained to: fire hydrants; commercial and industrial establishments; churches, schools and parking lots; service stations and motels; hospitals; police and fire stations; and establishments of similar nature. Access to these facilities shall be continuous and unobstructed unless otherwise approved by the Engineer.

Safe and adequate pedestrian zones and public transportation stops, as well as pedestrian crossings of the Work at intervals not exceeding 90 m (300 feet), shall be maintained unless otherwise approved by the Engineer.

Vehicular access to residential driveways shall be maintained to the property line except when necessary construction precludes such access for reasonable periods of time. If backfill has been completed to the extent that safe access may be provided, and the street is opened to local traffic, the Contractor shall immediately clear the street and driveways and provide and maintain access.

The Contractor shall cooperate with the various parties involved in the delivery of mail and the collection and removal of trash and garbage to maintain existing schedules for these services.

Grading operations, roadway excavation and fill construction shall be conducted by the Contractor in a manner to provide a reasonably satisfactory surface for traffic. When rough grading is completed, the roadbed surface shall be brought to a smooth, even condition satisfactory for traffic.

Unless otherwise authorized, work shall be performed in only one-half the roadway at one time. One half shall be kept open and unobstructed until the opposite side is ready for use. If one-half a street only is being improved, the other half shall be conditioned and maintained as a detour.

Trench work must be backfilled or bridged by steel plates in order to allow residents access to and from parking during non-working hours. Contractor shall always be prepared to provide access to emergency vehicles, even during working hours.

The Contractor shall schedule the work so as to prevent damage by all traffic, including but not limited to mail delivery. The Contractor shall not schedule work so as to conflict with trash pickup. The trash hauling schedule can be obtained by calling the City's contracted waste disposal company, Waste Management.

During overlay operations, the Contractors schedule for overlay application shall be designated to provide residents and business owners whose streets are to be overlaid sufficient paved parking within an 800 foot distance from their homes or businesses.

Seven calendar days prior to the start of any construction that affects vehicular traffic and/or parking or pedestrian routes, the Contractor shall give written notification of the impending disruption. For a full street closure, all residences and/or businesses on the affected street or alley shall be notified. For partial street closures, or curb, sidewalk and driveway repairs, the residences and/or businesses directly affected by the work shall be notified.

The notification shall be hand delivered and shall state the date and time the work will begin and its anticipated duration. The notification shall list two telephone numbers that may be called to obtain additional information. One number shall be the Contractor's permanent office or field office and the other number shall be a 24-hour number answered by someone who is knowledgeable about the project. At least one of the phone numbers shall be in the (760) area code. An answering machine shall not be connected to either number. The notification shall also give a brief description of the work and simple instructions to the home or business owner on what they need to do to facilitate the construction. The Contractor shall submit the contents of the draft notification to the Engineer for approval at least 21 calendar days prior to distribution. Notices shall not be distributed until approved by the Engineer.

For residences, the notification shall be pre-cut in a manner that enables it to be affixed to a doorknob without adhesives. It shall be a minimum size of 3-1/2 inches by 8-1/2 inches and shall be brightly colored with contrasting printing. The material shall be equivalent in strength and durability to 65 lb. card stock. The printing on the notice shall be no smaller than 12 point. An example of such notice is provided in Appendix "A".

In addition to the notifications, the contractor shall post no access/parking signs 72 hours in advance of the work being performed. The no access/parking signs shall state the date and time of access/parking restriction for a duration not to exceed the time necessary to complete the work at that location. Failure of the contractor to meet the posted date requires re-posting the no parking signs 72 hours in advance of the rescheduled work. If the work is delayed or rescheduled, the no access/parking signs shall be removed and re-posted 72 hours in advance of the rescheduled work.

The preparation, materials, printing and distribution of the notifications shall be included in the contract price bid for traffic control and the Contractor will not be entitled to any additional compensation for printing and distributing these notices.

The Contractor shall replace all street markings and striping damaged by construction activities.

The Contractor shall include in its Bid all costs for the above requirements.

7-10.2 Storage of Equipment and Materials in Public Streets. Construction materials shall not be stored in streets, roads, or highways.

Construction equipment shall not be stored at the Work site before its actual use on the Work nor for more than 5 days after it is no longer needed. Time necessary for repair or assembly of equipment may be authorized by the Engineer.

Excavated material, except that which is to be used as backfill in the adjacent trench, shall not be stored in the streets unless otherwise permitted. The streets must be protected from backfill material placed adjacent to the trench. After placing backfill, all excess material shall be removed immediately from the site.

7-10.3 Street Closures, Detours, Barricades. The Contractor shall comply with all applicable State, County, and City requirements for closure of streets. The Contractor shall provide barriers, guards, lights, signs, temporary bridges, flagpersons, and watchpersons. The Contractor shall be responsible for compliance with additional public safety requirements which may arise. The Contractor shall furnish and install signs and warning devices and promptly remove them upon completion of the Work.

After obtaining the Engineers approval and at least 5 working days before closing, detouring, partially closing or reopening any street, alley or other public thoroughfare the Contractor shall notify the following:

1) The Engineer..... 760-602-2720
2) Carlsbad Fire Department Dispatch 760-931-2197
3) Carlsbad Police Department Dispatch..... 760-931-2197
4) Carlsbad Traffic Signals Maintenance (extension 2937) 760-438-2980
5) Carlsbad Traffic Signals Operations 760-602-2752
6) North County Transit District..... 760-967-2828
7) Waste Management 760-929-9400
8) Ambulance Service 855-611-0056
9) Appropriate School District

The Contractor shall comply with their requirements. The Contractor shall obtain the Engineer's written approval prior to deviating from the requirements of 2) through, and including, 9) above. The Contractor shall obtain the written approval no less than five working days prior to placing any traffic control that affects bus stops.

The Contractor shall secure advanced approval from appropriate authorities for the use of any public bridges. Temporary bridges shall be clearly posted as to load limit, with signs and posting conforming to current requirements covering "signs" as set forth in the Traffic Manual published

by the California Department of Transportation. This manual shall also apply to the street closures, barricades, detours, lights, and other safety devices required.

All costs involved shall be included in the Bid.

Traffic controls shall be in accordance with the plans, The California Manual on Uniform Traffic Control Devices (FHWA MUTCD 2003 Revision 1, as amended for use in California) and these provisions. If any component in the traffic control system is damaged, displaced, or ceases to operate or function as specified, from any cause, during the progress of the work, the Contractor shall immediately repair said component to its original condition or replace said component and shall restore the component to its original location. In the event that the Contractor fails to install and/or maintain barricades or such other traffic signs, markings, delineation or devices as may be required herein, the Engineer may, at his/her sole option, install the traffic signs, markings, delineation or devices and charge the Contractor twenty dollars ($25.00) per day per traffic sign or device, or the actual cost of providing such traffic control facility, whichever is the greater.

7-10.3.1 Construction Area Signs and Control Devices. All construction traffic signs and control devices shall be maintained throughout the duration of work in good order and according to the approved traffic control plan. All construction area signs shall conform to the provisions of Section 206-7.2 et seq. All temporary reflective pavement markers shall conform to the provisions of Section 214-5.1.et seq. All temporary reflective channelizers shall conform to the provisions of Section 214-5.2 et seq. All paint for temporary traffic striping, pavement marking, and curb marking shall conform to the provisions of Section 210-1.6 et seq. except that all temporary paint shall be rapid dry water borne conforming to Section 210-1.6 for materials and Section 310-5 et seq. For workmanship. Warning and advisory signs, lights and devices installed or placed to provide traffic control, direction and/or warning shall be furnished, installed and maintained by the Contractor. Warning and advisory signs, lights and devices shall be promptly removed by the Contractor when no longer required. Warning and advisory signs that remain in place overnight shall be stationary mounted signs. Stationary signs that warn of non-existent conditions shall be removed from the traveled way and from the view of motorists in the traveled way or shielded from the view of the traveling public during such periods that their message does not pertain to existing conditions. Care shall be used in performing excavation for signs in order to protect underground facilities. All excavation required to install stationary construction area signs shall be performed by hand methods without the use of power equipment. Warning and advisory signs that are used only during working hours may be portable signs. Portable signs shall be removed from the traveled way and shielded from the view of the traveling public during non-working hours. During the hours of darkness, as defined in Division 1, Section 280, of the California Vehicle Code, portable signs shall be illuminated or, at the option of the Contractor, shall be in conformance with the provisions in Section 206-7.2 et seq. If illuminated traffic cones rather than post-type delineators are used during the hours of darkness, they shall be affixed or covered with reflective cone sleeves as specified in CALTRANS “Standard Specifications”, except the sleeves shall be 7” long. Personal vehicles of the Contractor's employees shall not be parked within the traveled way, including any Section closed to public traffic. Whenever the Contractor’s vehicles or equipment are parked on the shoulder within 6’ of a traffic lane, the shoulder area shall be closed with fluorescent traffic cones or portable delineators placed on a taper in advance of the parked vehicles or equipment and along the edge of the pavement at not less than 25’ intervals to a point not less than 25’ past the last vehicle or piece of equipment. A minimum of nine (9) cones or portable delineators shall be used for the taper. A W20-1 (Road Work Ahead) or C24 (Shoulder Work Ahead) sign shall be mounted, as required herein, on a signpost or telescoping flag tree with flags. The signpost or flag tree shall be placed where directed by the Engineer.

7-10.3.2 Maintaining Traffic. The Contractor's personnel shall not work closer than (6', nor operate equipment within 2' from any traffic lane occupied by traffic. For equipment the 2' shall be measured from the closest approach of any part of the equipment as it is operated and/or maneuvered in performing the work. This requirement may be waived when the Engineer has given written authorization to the reduction in clearance that is specific to the time, duration and location of such waiver, when such reduction is shown on the traffic control plans included in these contract documents, when such reduction is shown on the traffic control plans prepared by the Contractor and approved by the Engineer or for the work of installing, maintaining and removing traffic control devices. As a condition of such waiver the Engineer may require the Contractor to detour traffic, adjust the width of, or realign the adjacent traffic lane, close the adjacent traffic lane or provide barriers.

During the entire construction, a minimum of 1 paved traffic lanes, not less than 12' wide, shall be open for use by public traffic in each direction of travel unless otherwise indicated or approved in writing by the Owner.

7-10.3.3 Traffic Control System for Lane Closure. A traffic control system consists of closing traffic lanes or pedestrian walkways in accordance with the details shown on the plans, California Manual on Uniform Traffic Control Devices (FHWA MUTCD 2003 Revision 1, as amended for use in California) and provisions under "Maintaining Traffic" elsewhere in these Provisions. The provisions in this section will not relieve the Contractor from its responsibility to provide such additional devices or take such measures as may be necessary to maintain public safety.

When lanes are closed for only the duration of work periods, all components of the traffic control system, except portable delineators placed along open trenches or excavation adjacent to the traveled way, shall be removed from the traveled way and shoulder at the end work period. If the Contractor so elects, said components may be stored at selected central locations, approved by the Engineer, within the limits of the right-of-way.

7-10.3.4 Traffic Control for Permanent and Temporary Traffic Striping. During traffic stripe operations, traffic shall be controlled with lane closures, as provided for under "Traffic Control System for Lane Closure" of these Supplemental Provisions or by use of an alternative traffic control plan proposed by the Contractor and approved by the Engineer. The Contractor shall not start traffic striping operations using an alternative plan until the Contractor has submitted its plan to the Engineer and has received the Engineer's written approval of said plan.

7-10.3.5 Temporary Pavement Delineation. Temporary pavement delineation shall be furnished, placed, maintained and removed in accordance with the minimum standards specified in the California Manual on Uniform Traffic Control Devices (FHWA MUTCD 2015 Revision 1, as amended for use in California) published by CALTRANS. Whenever the work causes obliteration of pavement delineation, temporary or permanent pavement delineation shall be in place prior to opening the traveled way to public traffic. Lane line or centerline pavement delineation shall be provided at all times for traveled ways open to public traffic. All work necessary, including any required lines or marks, to establish the alignment of temporary pavement delineation shall be performed by the Contractor. When temporary pavement delineation is removed, all lines and marks used to establish the alignment of the temporary pavement delineation shall be removed by grinding.

Surfaces to receive temporary pavement delineation shall be dry and free of dirt and loose material. Temporary pavement delineation shall not be applied over existing pavement delineation or other temporary pavement delineation. Temporary pavement delineation shall be maintained until superseded or replaced with permanent pavement delineation.

Temporary pavement delineation shall be removed when, as determined by the Engineer, the temporary pavement delineation conflicts with the permanent pavement delineation or with a new traffic pattern for the area and is no longer required for the direction of public traffic. When temporary pavement delineation is required to be removed, all lines and marks used to establish the alignment of the temporary pavement delineation shall be removed.

7-10.3.6 Preparation of Traffic Control Plan Sheets. The Contractor shall prepare and submit traffic control plans for each site, as a part of the Work for any and all construction activities that are located within the traveled way. The Contractor shall have TCP prepared and submitted as a part of the Work for any construction activities that are a part of this project that are not included in the project plans. The Contractor must submit the TCP for the Engineer's review in conformance with the requirements of Section 2-5.3, et seq. and obtain the Engineer's approval of the TCP prior to implementing them. The minimum 20-day review period specified in Section 2-5.3.1 for shop drawings and submittals shall pertain to each submittal of TCP, new, modified or added to, for the Engineer's review. New or revised TCP submittals shall include all TCP needed for the entire duration of the Work. Each phase of the TCP shall be shown in sufficient scale and detail to show the lane widths, transition lengths, curve radii, stationing of features affecting the traffic control plan and the methodology proposed to transition to the subsequent TCP phase. When the vertical alignment of the traveled surface differs from the finished pavement elevation vertical curves must also be shown.

Design of TCP for construction shall meet the requirements of the City and the California Manual on Uniform Traffic Control Devices (FHWA MUTCD 2015 Revision 1, as amended for use in California as published by CALTRANS. Such modification, addition, supplement, and/or new design of TCP shall be prepared by a registered professional engineer appropriately registered in the State of California. The Engineer shall be the sole judge of the suitability and quality of any such modifications, supplements, and/or new designs to TCP. The Engineer may approve any such modifications, supplements, and/or new designs to the TCP when, in the Engineer's sole opinion, such modifications, supplements, and/or new designs to the TCP prepared by the registered professional engineer retained by the Contractor will be beneficial to the best interests of the Agency. Such modification, addition, supplement, and/or new design shall not be implemented and no work shall be commenced that is contingent on such approval until the changed TCP are approved by the Engineer. The preparation of such modification, addition, supplement, and/or new designs of TCP shall not presuppose their approval or obligate the Agency in any fashion. Submittal and review requirements for such modifications, supplements, and/or new designs to TCP shall conform to the requirements of Section 2-5.3 Shop Drawings and Submittals.

7-10.3.7 Payment. The Contractor shall provide traffic control at the contract lump sum price bid. The contract lump sum price paid for "traffic control" shall include full compensation for furnishing all labor (including flagging costs), materials (including signs), tools, equipment and incidentals, and for doing all the work involved in preparation, reproduction and changing of traffic control plans, placing, applying traffic stripes and pavement markers with bituminous adhesive, removing, storing, maintaining, moving to new locations, replacing, and disposing of the components of the traffic control system as shown on the plans and approved additions and modifications, as specified in these supplemental provisions, and as directed by the Engineer. All expenses and time to prepare and review modifications, additions, supplements and/or new TCP designs shall be included in the lump sum bid for traffic control and no additional payment will be made therefore. Flagging costs will be paid for as a part of the Lump Sum Amount for "Traffic Control." The cost of labor and material for portable concrete barriers will be paid for at the unit price bid. When there is no bid item the cost of labor and material for portable concrete barriers they will be paid

as an incidental to the work being performed and no additional payment will be made therefore. Progress payments for "Traffic Control" will be based on the percentage of the improvement work completed.

7-10.4 Safety.

7-10.4.1 Safety Orders. The Contractor shall have at the Work site, copies or suitable extracts of: Construction Safety Orders, Tunnel Safety Orders and General Industry Safety Orders issued by the State Division of Industrial Safety. The Contractor shall comply with provisions of these and all other applicable laws, ordinances, and regulations.

Before excavating any trench 5 feet or more in depth, the Contractor shall submit a detailed plan to the Agency showing the design of shoring, bracing, sloping, or other provisions to be made for the workers' protection from the hazard of caving ground during the excavation of such trench. If the plan varies from the shoring system standards, the plan shall be prepared by a registered Civil Engineer. No excavation shall start until the Engineer has accepted the plan and the Contractor has obtained a permit from the State Division of Industrial Safety. A copy of the permit shall be submitted to the Engineer.

Payment for performing all work necessary to provide safety measures shall be included in the prices bid for other items of work except where separate bid items for excavation safety are provided or required by law.

7-10.4.2 Use of Explosives. Explosives may be used only when authorized in writing by the Engineer, or as otherwise stated in the Specifications. Explosives shall be handled, used, and stored in accordance with all applicable regulations.

The Engineer's approval of the use of explosives shall not relieve the Contractor from liability for claims caused by blasting operations.

7-10.4.3 Special Hazardous Substances and Processes. Materials that contain hazardous substances or mixtures may be required on the Work. A Material Safety Data Sheet as described in Section 5194 of the California Code of Regulations shall be requested by the Contractor from the manufacturer of any hazardous products used.

Material usage shall be accomplished with strict adherence to California Division of Industrial Safety requirements and all manufacturer warnings and application instructions listed on the Material Safety Data Sheet and on the product container label.

The Contractor shall notify the Engineer if a specified product cannot be used under safe conditions.

7-10.4.4 Confined Spaces.

(a) Confined Space Entry Program. The Contractor shall be responsible for implementing, administering and maintaining a confined space entry program (CSEP) in accordance with Sections 5156, 5157 and 5158, Title 8, CCR.

Prior to starting the Work, the Contractor shall prepare and submit its comprehensive CSEP to the Engineer. The CSEP shall address all potential physical and environmental hazards and contain procedures for safe entry into confined spaces, including, but not limited to the following:

1. Training of personnel
2. Purging and cleaning the space of materials and residue
3. Potential isolation and control of energy and material inflow
4. Controlled access to the space
5. Atmospheric testing of the space
6. Ventilation of the space
7. Special hazards consideration
8. Personal protective equipment
9. Rescue plan provisions

The Contractor's submittal shall include the names of its personnel, including subcontractor personnel, assigned to the project who will have CSEP responsibilities, their CSEP training, and their specific assignment and responsibility in carrying out the CSEP.

(b) Permit-Required Confined Spaces. Entry into permit-required confined spaces as defined in Section 5157, Title 8, CCR may be required as a part of the Work. All manholes, tanks, vaults, pipelines, excavations, or other enclosed or partially enclosed spaces shall be considered permit-required confined spaces until the pre-entry procedures demonstrate otherwise. The Contractor shall implement a permit space program prior to performing any work in a permit-required confined space. A copy of the permit shall be available at all times for review by Contractor and Agency personnel at the Work site.

(c) Payment. Payment for implementing, administering, and providing all equipment and personnel to perform the CSEP shall be included in the bid items for which the CSEP is required.

7-10.4.5 Safety and Protection of Workers and Public. The Contractor shall take all necessary precautions for the safety of employees on the work and shall comply with all applicable provisions of Federal, State and Municipal safety laws and building codes to prevent accidents or injury to persons on, about, or adjacent to the premises where the work is being performed. The Contractor shall erect and properly maintain at all times, as required by the conditions and progress of the work, all necessary safeguards for the protection of workers and public and shall use danger signs warning against hazards created by such features of construction as protruding nails, hoists, well holes, and falling materials.

7-11 PATENT FEES OR ROYALTIES. The Contractor shall absorb in its Bid the patent fees or royalties on any patented article or process furnished or used in the Work. The Contractor shall indemnify and hold the Agency harmless from any legal action that may be brought for infringement of patents.

7-12 ADVERTISING. The names, addresses and specialties of Contractors, Subcontractors, architects, or engineers may be displayed on removable signs. The size and location shall be subject to the Engineer's approval.

Commercial advertising matter shall not be attached to or painted on the surfaces of buildings, fences, canopies, or barricades.

7-13 LAWS TO BE OBSERVED. The Contractor shall keep fully informed of State and National laws and County and Municipal ordinances and regulations which in any manner affect those employed in the Work or the materials used in the Work or in any way affect the conduct of the Work. The Contractor shall at all times observe and comply with such laws, ordinances, and

regulations. Municipal ordinances that affect this work include Chapter 11.06. Excavation and Grading. If this notice specifies locations or possible materials, such as borrow pits or gravel beds, for use in the proposed construction project which would be subject to Section 1601 or Section 1603 of the Fish and Game Code, the conditions established pursuant to Section 1601 et seq. of the Fish and Game Code shall become conditions of the contract.

7-14 ANTITRUST CLAIMS. Section 7103.5 of the Public Contract Code provides:

> "In entering into a public works contract or a subcontract to supply goods, services, or materials pursuant to a public works contract, the contractor or subcontractor offers and agrees to assign to the awarding body all rights, title, and interest in and to all causes of action it may have under Section 4 of the Clayton Act (15 U.S.C. Sec 15) or Cartwright Act (Chapter 2 [commencing with Section 16700] of Part 2 of Division 7 of the Business and Professions Code), arising from purchases of goods, services, or materials pursuant to the public works contract or subcontract. The assignment shall be made and become effective at the time the awarding body tenders final payment to the contractor, without further acknowledgment of the parties."

SECTION 8 – FACILITIES FOR AGENCY PERSONNEL

8-1 GENERAL. No office space is required for Agency personnel. However, Contractor is required to maintain a laydown area within the general vicinity of the Project. The District will not provide a laydown yard. Contractor is responsible for acquiring a laydown yard.

SECTION 9 – MEASUREMENT AND PAYMENT

REFER TO TECHNICAL SPECIFICATION 01150 MEASUREMENT AND PAYMENT FOR SPECIFIC INFORMATION REGARDING MEASUREMENT AND PAYMENT OF PROJECT QUANTITIES FOR LUMP SUM AND UNIT PRICED WORK.

9-1 MEASUREMENT OF QUANTITIES FOR UNIT PRICE WORK.

9-1.1 General. Unless otherwise specified, quantities of work shall be determined from measurements or dimensions in horizontal planes. However, linear quantities of pipe, piling, fencing and timber shall be considered as being the true length measured along longitudinal axis.

Unless otherwise provided in Specifications, volumetric quantities shall be the product of the mean area of vertical or horizontal sections and the intervening horizontal or vertical dimension. The planimeter shall be considered an instrument of precision adapted to measurement of all areas.

9-1.2 Methods of Measurement. Materials and items of work which are to be paid for on basis of measurement shall be measured in accordance with methods stipulated in the particular sections involved.

9-1.3 Certified Weights. When payment is to be made on the basis of weight, the weighing shall be done on certified platform scales or, when approved by the Engineer, on a completely automated weighing and recording system. The Contractor shall furnish the Engineer with duplicate licensed weighmaster's certificates showing actual net weights. The Agency will accept the certificates as evidence of weights delivered.

9-1.4 Units of Measurement. The system of measure for this contract shall be the U.S. Standard Measures.

9-2 LUMP SUM WORK. Items for which quantities are indicated "Lump Sum", "L.S.", or "Job", shall be paid for at the price indicated in the Bid. Such payment shall be full compensation for the items of work and all work appurtenant thereto.

When required by the Specifications or requested by the Engineer, the Contractor shall submit to the Engineer within 15 days after award of Contract, a detailed schedule in triplicate, to be used only as a basis for determining progress payments on a lump sum contract or designated lump sum bid item. This schedule shall equal the lump sum bid and shall be in such form and sufficiently detailed as to satisfy the Engineer that it correctly represents a reasonable apportionment of the lump sum.

9-3 PAYMENT.

9-3.1 General. The quantities listed in the Bid schedule will not govern final payment. Payment to the Contractor will be made only for actual quantities of Contract items constructed in accordance with the Plans and Specifications. Upon completion of construction, if the actual quantities show either an increase or decrease from the quantities given in the Bid schedule, the Contract Unit Prices will prevail subject to the provisions of Section 3-2.2.1.

The unit and lump sum prices to be paid shall be full compensation for the items of work and all appurtenant work, including furnishing all materials, labor, equipment, tools, and incidentals.

Payment will not be made for materials wasted or disposed of in a manner not called for under the Contract. This includes rejected material not unloaded from vehicles, material rejected after it has been placed, and material placed outside of the Plan lines. No compensation will be allowed for disposing of rejected or excess material.

Payment for work performed or materials furnished under an Assessment Act Contract will be made as provided in particular proceedings or legislative act under which such contract was awarded.

Whenever any portion of the Work is performed by the Agency at the Contractor's request, the cost thereof shall be charged against the Contractor, and may be deducted from any amount due or becoming due from the Agency.

Whenever immediate action is required to prevent injury, death, or property damage, and precautions which are the Contractor's responsibility have not been taken and are not reasonably expected to be taken, the Agency may, after reasonable attempt to notify the Contractor, cause such precautions to be taken and shall charge the cost thereof against the Contractor, or may deduct such cost from any amount due or becoming due from the Agency. Agency action or inaction under such circumstances shall not be construed as relieving the Contractor or its Surety from liability.

Payment shall not relieve the Contractor from its obligations under the Contract; nor shall such payment be construed to be acceptance of any of the Work. Payment shall not be construed as the transfer of ownership of any equipment or materials to the Agency. Responsibility of ownership shall remain with the Contractor who shall be obligated to store any fully or partially completed work or structure for which payment has been made; or replace any materials or equipment required to be provided under the Contract which may be damaged, lost, stolen or otherwise degraded in any way prior to acceptance of the Work, except as provided in Section 6-10.

Guarantee periods shall not be affected by any payment but shall commence on the date of recordation of the "Notice of Completion."

If, within the time fixed by law, a properly executed notice to stop payment is filed with the Agency, due to the Contractor's failure to pay for labor or materials used in the Work, all money due for such labor or materials will be withheld from payment to the Contractor in accordance with applicable laws.

At the expiration of 35 days from the date of acceptance of the Work by the Board, or as prescribed by law, the amount deducted from the final estimate and retained by the Agency will be paid to the Contractor except such amounts as are required by law to be withheld by properly executed and filed notices to stop payment, or as may be authorized by the Contract to be further retained.

9-3.2 Partial and Final Payment. The Engineer will, after award of Contract, establish a closure date for the purpose of making monthly progress payments. The Contractor may request in writing that such monthly closure date be changed. The Engineer may approve such request when it is compatible with the Agency's payment procedure.

Each month, the Engineer will make an approximate measurement of the work performed to the closure date as basis for making monthly progress payments. The estimated value will be based on contract unit prices, completed change order work and as provided for in Section 9-2 of these General Provisions. Progress payments shall be made no later than thirty (30) calendar days after the closure date. Five (5) working days following the closure date, the Engineer shall complete the detailed progress pay estimate and submit it to the Contractor for the Contractor's information. Should the Contractor assert that additional payment is due, the Contractor shall within ten (10) days of receipt of the progress estimate, submit a supplemental payment request to the Engineer with adequate justification supporting the amount of supplemental payment request. Upon receipt of the supplemental payment request, the Engineer shall, as soon as practicable after receipt, determine whether the supplemental payment request is a proper payment request. If the Engineer determines that the supplemental payment request is not proper, then the request shall be returned to the Contractor as soon as practicable, but not later than seven (7) days after receipt. The returned request shall be accompanied by a document setting forth in writing the reasons why the supplemental payment request was not proper. In conformance with Public Contract Code Section 20104.50, the City shall make payments within thirty (30) days after receipt of an undisputed and properly submitted supplemental payment request from the Contractor. If payment of the undisputed supplemental payment request is not made within thirty (30) days after receipt by the Engineer, then the City shall pay interest to the Contractor equivalent to the legal rate set forth in subdivision (a) of Section 685.010 of the Code of Civil Procedure.

From each progress estimate, 5 percent will be deducted and retained by the Agency, and the remainder less the amount of all previous payments will be paid. After 50 percent of the Work has been completed and if progress on the Work is satisfactory, the deduction to be made from remaining progress estimates and from the final estimate may be limited to $500 or 5 percent of the first half of total Contract amount, whichever is greater.

No progress payment made to the Contractor or its sureties will constitute a waiver of the liquidated damages under 6-9.

As provided in Section 22300 of the California Public Contract Code, the Contractor may substitute securities for any monies withheld by the Agency to ensure performance under the Contract.

After final inspection, the Engineer will make a Final Payment Estimate and process a corresponding payment. This estimate will be in writing and shall be for the total amount owed the Contractor as determined by the Engineer and shall be itemized by the contract bid item and change order item with quantities and payment amounts and shall show all deductions made or to be made for prior payments and amounts to be deducted under provisions of the contract. All prior estimates and progress payments shall be subject to correction in the Final Payment Estimate.

The Contractor shall have 30 calendar days from receipt of the Final Payment Estimate to make written statement disputing any bid item or change order item quantity or payment amount. The Contractor shall provide all documentation at the time of submitting the statement supporting its position. Should the Contractor fail to submit the statement and supporting documentation within the time specified, the Contractor acknowledges that full and final payment has been made for all contract bid items and change order items.

If the Contractor submits a written statement with documentation in the aforementioned time, the Engineer will review the disputed item within 30 calendar days and make any appropriate

adjustments on the Final Payment. Remaining disputed quantities or amounts not approved by the Engineer will be subject to resolution as specified in Section 3-5, Disputed Work.

The written statement filed by the Contractor shall be in sufficient detail to enable the Engineer to ascertain the basis and amount of said disputed items. The Engineer will consider the merits of the Contractor's claims. It will be the responsibility of the Contractor to furnish within a reasonable time such further information and details as may be required by the Engineer to determine the facts or contentions involved in its claims. Failure to submit such information and details will be sufficient cause for denying payment for the disputed items.

9-3.2.1 Payment for Claims. Except for those final payment items disputed in the written statement required in Section 9-3.2 all claims of any dollar amount shall be submitted in a written statement by the Contractor no later than the date of receipt of the final payment estimate. Those final payment items disputed in the written statement required in Section 9-3.2 shall be submitted no later than 30 days after receipt of the Final Payment estimate. No claim will be considered that was not included in this written statement, nor will any claim be allowed for which written notice or protest is required under any provision of this contract including Sections 3-4 Changed Conditions, 3-5 Disputed Work, 6-6.3 Payment for Delays to Contractor, 6-6.4 Written Notice and Report, or 6-7.3 Contract Time Accounting, unless the Contractor has complied with notice or protest requirements.

The claims filed by the Contractor shall be in sufficient detail to enable the Engineer to ascertain the basis and amount of said claims. The Engineer will consider and determine the Contractor's claims and it will be the responsibility of the Contractor to furnish within a reasonable time such further information and details as may be required by the Engineer to determine the facts or contentions involved in its claims. Failure to submit such information and details will be sufficient cause for denying the claims.

Payment for claims shall be processed within 30 calendar days of their resolution for those claims approved by the Engineer. The Contractor shall proceed with informal dispute resolution under Section 3-5, Disputed Work, for those claims remaining in dispute.

9-3.3 Delivered Materials. When provided for in the Specifications, and subject to the limitation and conditions therein, the cost of materials and equipment delivered but not incorporated into the Work will be included in the progress estimate.

9-3.3.1 Delivered Materials. The cost of materials and equipment delivered but not incorporated into the work will not be included in the progress estimate.

9-3.4 Mobilization. When a bid item is included in the Proposal form for mobilization and subject to the conditions and limitations in the Specifications, the costs of work in advance of construction operations and not directly attributable to any specific bid item will be included in the progress estimate. When no such bid item is provided, payment for such costs will be considered to be included in the other items of work.

9-3.4.1 Mobilization and Preparatory Work. Payment for mobilization and preparatory Work will be included in the various items of work and no other payment will be made.

9-4 BID ITEMS. Payment for each Bid Item shall be made at the quantity and type as listed in the Contractor's Proposal. All work shown or mentioned on the plans, in the Contract Documents, General Provisions, or Technical Provisions/Specifications shall be considered as included in the

Bid Items. Contractor must protect existing utilities, improvements, landscaping, irrigation systems, and vegetation in place. If damaged during the work, Contractor is responsible to repair or replace any utilities, improvements, landscaping, irrigation systems, and vegetation at his expense.

SUPPLEMENTAL PROVISIONS

SUPPLEMENTAL PROVISIONS
TO
STANDARD SPECIFICATIONS FOR PUBLIC WORKS CONSTRUCTION
PART 2, CONSTRUCTION MATERIALS

SECTION 200 - ROCK MATERIALS

200-1 ROCK PRODUCTS

Add the following section:

200-1.2.2 Permeable Material. Permeable material shall consist of hard, durable, clean sand, gravel, or crushed stone, and shall be free from organic material, clay balls, or other deleterious substances. Class 1 and Class 2 permeable material shall have a Durability Index of not less than 40. Class 2 Permeable material shall have a Sand Equivalent value of not less than 75. Class 1 permeable material shall conform to the requirements in this section and Table 200-1.2.2(A). Class 2 permeable material shall conform to the requirements in this section and Table 200-1.2.2(B). When permeable material is required and the class or kind is not specified, Class 1 permeable material shall be used. The alternative gradings within Class 1 permeable material are identified by types. Unless otherwise shown on the plans the Contractor will be permitted to furnish and place any one of the types provided for this class. The percentage composition by mass of permeable material in place shall conform to the gradings in Tables 200-1.2.2(A) and 200-1.2.2(B).

TABLE 200-1.2.2(A)
CLASS 1 PERMEABLE MATERIAL

Sieve Sizes	Percentage Passing	
	Type A	Type B
50-mm (2”)	---	100
37.5-mm ($1^1/_2$”)	---	95-100
19-mm ($^3/_4$”)	100	50-100
12.5-mm ($^1/_2$”)	95-100	---
9.5-mm ($^3/_8$”)	70-100	15-55
4.75-mm (No. 4)	0-55	0-25
2.36-mm (No. 8)	0-10	0-5
75-µm (no. 200)	0-3	0-3

TABLE 200-1.2.2(B)
CLASS 2 PERMEABLE MATERIAL

Sieve Sizes	Percentage Passing
25-mm (1”)	100
19-mm ($^3/_4$”)	90-100
9.5-mm ($^3/_8$”)	40-100
4.75-mm (No. 4)	25-40
2.36-mm (No. 8)	18-33
600-µm (No. 30)	5-15
300-µm (No. 50)	0-7
75-µm (no. 200)	0-3

200-2 UNTREATED BASE MATERIALS

200-2.1 General. Add the following: Aggregate base shall be Class 2 Aggregate Base per Caltrans Standard Specification, July 1999, Section 26: Aggregate Bases, Subsection 26-1.02A Class 2 Aggregate Base and as specified herein.

Add the following section:
200-2.7 Class 2 Aggregate Base. Aggregate for Class 2 aggregate base shall be free from organic matter and other deleterious substances and shall be of such nature that it can be compacted readily under watering and rolling to form a firm, stable base. Aggregate may include material processed from reclaimed asphalt concrete, portland cement concrete, lean concrete base, cement treated base or a combination of any of these materials.

Aggregate shall conform to the grading and quality requirements shown in the following tables. At the option of the Contractor, the grading for either the 11/2-inch maximum or 3/4 inch maximum shall be used, except that once a grading is selected it shall not be changed without the Engineer's written approval.

AGGREGATE GRADING REQUIREMENTS

Percentage Passing

	11/2" Maximum	*3/4" Maximum*
Sieve Sizes	*Operating Range*	*Operating Range*
2"	100	—
11/2"	90-100	—
1"	—	100
3/4"	50-85	90-100
No. 4	25-45	35-60
No. 30	10-25	10-30
No. 200	2-9	2-9

QUALITY REQUIREMENTS

Tests	*Operating Range*
Resistance (R-value)	78 Min.
Sand Equivalent	25 Min.
Durability Index	35 Min.

The aggregate shall not be treated with lime, cement or other chemical material before the Durability Index test is performed.

If the results of either or both the aggregate grading and Sand Equivalent tests do not meet the requirements specified for “Operating Range” but meet the “Contract Compliance” requirements, placement of the aggregate base may be continued for the remainder of that day. However, another day's work may not be started until tests, or other information, indicate to the satisfaction of the Engineer that the next material to be used in the work will comply with the requirements specified for “Operating Range.”

If the results of either or both the aggregate grading and Sand Equivalent tests do not meet the requirements specified for “Contract Compliance,” the aggregate base which is represented by these tests shall be removed. However, if requested by the Contractor and approved by the Engineer, the aggregate base may remain in place and the Contractor shall pay to the City $2.25 per cubic yard for such aggregate base left in place. The City may deduct this amount from any moneys due, or that may become due, the Contractor under the contract. If both the aggregate

grading and Sand Equivalent do not conform to the “Contract Compliance” requirements, only one adjustment shall apply.

No single aggregate grading or Sand Equivalent test shall represent more than 500 cubic yards or one day's production, whichever is smaller.

SECTION 201 - CONCRETE, MORTAR, AND RELATED MATERIALS

201-1 PORTLAND CEMENT CONCRETE

TABLE 201-1.1.2(A) Modify as follows:

TABLE 201-1.1.2(A) (3)
PORTLAND CEMENT CONCRETE

Type of Construction	Concrete Class	Maximum Slump mm (Inches)
All Concrete Used Within the Right-of-Way	330-C-23 (560-C-3250) (1)	(2)
Trench Backfill Slurry	115-E-3 (190-E-400)	200 (8”)
Street Light Foundations and Survey Monuments	330-C-23 (560-C-3250)	100 (4”)
Traffic Signal Foundations	350-C-27 (590-C-3750)	100 (4”)
Concreted-Rock Erosion Protection	310-C-17 (520-C-2500P)	per Table 300-11.3.1

(1) Except that concrete required to be of higher strength by Table 201-1.1.2(A) SSPWC shall be as per Table 201-1.1.2(A) SSPWC.
(2) As per Table 201-1.1.2(A) SSPWC.
(3) Portions of Table 201-1.1.2(A) of the Standard Specifications for Public Works Construction not shown herein as changed are not affected by this table.

201-1.2 Materials.

201-1.2.4(a) Integral Colored Concrete. Add the following: Integral color shall consist of colored admixtures developed for use in ready mixed concrete. The product shall be made of the highest quality pigments, as well as other ingredients designed to enhance the color and improve the pigment dispersion, workability and finishing performance of the concrete. Integral color pigments shall meet or exceed ASTM-C-979. The coloring method shall be designed for concrete flatwork applications (salt finished, broom finishes, rotary finishes), as well as vertical surfaces, and other types of architectural concrete. Pigment shall be a permanent coloration, uniform throughout the concrete surface and interior, and shall be highly UV and fade resistant.

Integral colored concrete shall be cured with QC Color Cure color matched to the concrete (see product information bulletin). Provide sample panel submittals of all colors to be used in the installation on identical surfaces for approval by Resident Engineer. Contractor shall provide a maintenance schedule for integral colored concrete.

Admixture for all integral colored concrete paving in medians and other integral colored concrete shall be the following:

Color: to match existing
Curing: Scofield Colorcure Concrete Sealer (or approved equal). See Section 201 of these Supplemental Provisions for Concrete Curing Materials.

Manufacturer: Scofield Chromix Admixtures for color-conditioned concrete, or approved equal
L.M. Scofield Company
6533 Bandini Boulevard
Los Angeles, CA 90040
1-800-800-9900

Admixture products and procedures for installation shall be in strict accordance with the manufacturer's specifications and recommendations, and those published by the American Concrete Institute (ACI) and the Portland Cement Association (PCA).

201-1.2.4 Chemical Admixtures. (e) Air-Entraining Admixtures. Substitute the following: The air content shall not deviate from the percentage specified or permitted by more than 1-1/2 percentage points. The air content of freshly mixed concrete will be determined by California Test Method No. 504.

Add the following:
201-1.6 Finish: match existing

Add the following:
201-1.7 Miscellaneous Concrete Finishing Products.

201-1.7.1 Water Base Penetrating Sealer for Integral Colored Concrete. (Scofield Colorcure Concrete Sealer or approved equal)

Water base penetrating sealer shall be a sealer designed for the protection of imprinted and natural concrete.

Water base penetrating sealer shall be a sealer designed for the protection of imprinted, colored and natural concrete, and other masonry surfaces to preserve the natural appearance of the masonry without darkening or adding gloss to the surface. It shall preserve the natural slip resistance of the concrete, etc. Sealer shall repel spills and soils, minimizing staining and maintenance.

Seal shall leave no visible material on the surface and shall be absorbed and locked into the pores of the masonry, repelling liquids and soils but leaving the top surface natural in appearance. Install per manufacturer's directions. Seal shall be compatible with the surfaces and materials which it is applied. Concrete sealer shall conform to the following specifications:

Color: Clear, non-yellowing
Odor: Mild
Flash Point: None (C.O.C. method)
Specific Grav.: 1.03
Density: 8.6 pounds per gallon
Drying Time: 30 minutes to 60 minutes
Cure Time: 24 to 48 hours
VOC Content: None (0 g/l) excluding water
Polymer Type: Proprietary Reactive Resin System
Coverages (approximate):

Smooth Concrete: 300 to 400 square feet per gallon
Rough Concrete: 200 to 300 square feet per gallon
Note: Coverages vary depending on porosity and condition of surface and method of application.
Method of: Airless sprayer.
Application
Manufacturer: Scofield Chromix Admixtures for color-conditioned concrete, or approved equal
L.M. Scofield Company
6533 Bandini Boulevard
Los Angeles, CA 90040
1-800-800-9900

All materials shall be furnished, prepared, applied, cured, and stored according to the product manufacturer's direction.

201-1.2.4 Chemical Admixtures. (e) Air-entraining Admixtures. Substitute the following: The air content shall not deviate from the percentage specified or permitted by more than 1-1/2 percentage points. The air content of freshly mixed concrete will be determined by California Test Method No. 504.

201-3 EXPANSION JOINT FILLER AND JOINT SEALANTS.

201-3.4 Type "A" Sealant (Two-Part Polyurethane Sealant). Add the following:

All finished concrete surfaces shall have a ½" continuous expansion joint at locations indicated on the plans and notes and shall be located either parallel to perpendicular to the curb line. When not otherwise indicated, all expansion joints located adjacent to colored concrete shall be sealant Type "A" and colored to match the color of the concrete surface.

Contractor shall provide joint sealants that have been produced and installed to establish and to maintain watertight and airtight continuous seals without causing staining or deterioration of joint substrates.

Contractor shall submit product data from the manufacturer of each joint sealant product required, including instructions for joint preparation and joint sealer application. Contractor shall also submit samples for initial selection purposes in form of manufacturer's standard bead samples, consisting of strips of actual products showing full range of colors available, for each product exposed to view. Samples shall be submitted to Engineer. Submit complete schedule of type (and location where type is to be used) of each sealant.

Contractor shall engage an experienced installer who has completed joint sealant applications similar in material, design and extent to that indicated for Project that have resulted in construction with a record of successful in-service performance.

Provide joint sealants, joint fillers, and other related materials that are compatible with one another and with joint substrates under conditions of service and application, as demonstrated by sealant manufacturer based on testing and field experience.

Provide color selections made by Engineer from manufacturer's full range of standard colors for products of type indicated. Sealant color parallel to curbline shall match color of Paving Treatment Type "A" as specified in Section 201-1.2.4(a) of these Special Provisions.

Joint sealants shall be multi-component polyurethane sealant. Except as otherwise indicated, provide manufacturer's standard, non-modified, 2-or-more-part, polyurethane-based, elastomeric sealant; complying with either ASTM-C-920-87, Type M, Grade P, Class 25, or FS TT-S 0227E Class A, non-sag, Type II.

Acceptable Products: "Sonneborn NPII"; Sonneborn Building Products Division; "Scofield Litho-seal Trafficalk 3-G", L.M. Scofield Company; or equivalent, as approved by the Engineer.

Provide sealant backings of material and type that are nonstaining; are compatible with joint substrates, sealants, primers and other joint fillers; and are approved for applications indicated by sealant manufacturer based on field experience and laboratory testing.

Plastic foam joint fillers shall be preformed compressible, resilient, nonstaining, nonwaxing, non-extruding strips of flexible plastic foam either open-cell polyurethane foam or closed-cell polyethylene foam, subject to approval of sealant manufacturer, for cold-applied sealants only. Polystyrene foam is not acceptable.

201-3.7 Type "D" Joint Sealant. Add the following: Hot-melt rubberized asphalt shall be in solid form at room temperature and fluid at an application temperature of 190°C (375°F) to 205°C (400°F). Fumes from the material shall be non-toxic. Sealant shall be suitable for use in both asphalt concrete and portland cement concrete. Performance characteristics of the cured hot-melt rubberized asphalt shall be as per Table 201-3.7(A).

TABLE 201-3.7(A)
CURED HOT-MELT RUBBERIZED ASPHALT

Property	Measuring Standard (ASTM Designation)	Results	Conditions
Cone Penetration	ASTM D 3407, Sec. 5	3.5 mm, max.	25°C, 150 g, 5 s
Flow, 60°C	ASTM D 3407, Sec. 6	5 mm, max.	
Resilience	ASTM D 3407, Sec. 8	25%, min.	25°C
Softening Point,	ASTM D 36	82 °C, min.	
Ductility,	ASTM D 113	300 mm, min.	25°C, 50 mm/min
Flash Point, COC, °C	ASTM D 92	288 °C, min.	
Viscosity, Brookfield Thermosel,	ASTM D 4402	2.5-3.5 Pa·s	No. 27 Spindle, 20 rpm, 190°C,

SECTION 203 - BITUMINOUS MATERIALS

203-6 ASPHALT CONCRETE.

Add the following:

203-6.2.1 Acceptance. Wet Mix or Core sampled asphalt concrete will be considered in conformance with the mix design when the Asphalt Binder content is within +/-0.5% of the design mix and the gradation conforms to the grading as shown in Table 203-6.4.3 (A). Deviations in gradation may be considered in conformance with the mix design provided the stability of the completed mix complies with the requirements for Stabilometer Value per Table 203-6.4.3 (A)

Plant inspected asphalt concrete will be considered in conformance with the mix design when visually inspected and the combined gradation of the Bin samples show conformance to the grading as shown in Table 203-6.4.3 (A).

203-6.4 Asphalt Concrete Mixtures. Add the following: Conventional Asphalt concrete shall be class C2-PG64-10-RAP for surface course, and B-PG64-10-RAP for base course. Asphalt concrete shall be class D2-PG70-10 for dikes and class E-PG70-10 ditches.

203-6.4.3 Composition and Grading. Add the following: Evaluation of asphalt concrete shall be determined from samples of asphalt concrete taken after completion of all processing (Wet Mix) or by core sample analysis of the in-place asphalt concrete or by direct central plant inspection that confirms the production of a particular mix design and verifies using samples of aggregate taken before the addition of asphalt and mineral filler (Bin). All samples shall be taken in accordance with Calif. Test 125.

When Wet Mix or Core samples of asphalt concrete are to be used for evaluation, sufficient size samples shall be taken to ensure representative and adequate quantity of material for:

1. Asphalt Content and Gradation of Extraction using Calif. Test 382 or ASTM 2172, and Calif. Test 202.
2. Stability using:
   a. Hveem stability Value using Calif. Tests 304 and 366 shall be the average of three individual Values
      or
   b. Marshall Stability[1] in accordance with the Asphalt Institute's MS-2 fabricated and tested for traffic volume and shall be the average of three specimens.

[1]Only use Marshall Stability when the deviation between individual Hveem Stabilometer Values are greater than +/-5.

When using core sample analysis, the samples must be properly prepared to safeguard against influx of outside contaminates and so that the cut surfaces do not influence the test results.

203-6.8 Asphalt Concrete Storage. Add the following: Open graded or Gap graded asphalt concrete stored in excess of 2 hours, and any other asphalt concrete stored in excess of 10 hours, shall not be used in the work.

203-11 ASPHALT RUBBER HOT MIX (ARHM) WET PROCESS
203-11.3 Composition and Grading. Add the following: Asphalt Rubber Hot Mix shall be Gap Graded class ARHM-GG-C.

SECTION 207 - PIPE

207-2 REINFORCED CONCRETE PIPE.

207-2.5 Joints. Add the following: When watertight joints are indicated on the plans they shall be of the rubber-gasketed type meeting the requirements of ASTM Standard Specification designations C 361-95 and C 443-94.

Pipe designated in the plans as “pressure pipe” or with a 100-year hydraulic grade line at or above the soffit shall be bell and groove spigot joint with “O” rings conforming to ASTM C-443 and C-361 for the limits shown on the plans.

207-9 IRON PIPE AND FITTINGS

207-9.2.2 Pipe Joints Unless otherwise shown on the Plans, all joints shall be the push-on type joint. Joints and accessories shall conform to the requirements and dimensions specified in ANSI A21.11, AWWA C111. Rubber gasket material shall conform to 208-1.2 and AWWA C111 and ANSI A21.11-90.

207-9.2.3 Fittings. Add the following: Ductile iron pipe and fittings shall be manufactured in accordance with ANSI 21.50, AWWA C150 and ANSI 21.51, AWWA C151, and shall be of the size and thickness classes shown on the Plans. Unless otherwise specified, size 4-inches through 6-inches DIP shall be thickness Class 52, while size 8-inches and larger shall be thickness Class 50.

207-9.2.4 Lining and Coating. Replace with the following: Unless otherwise specified, all iron pipe and fittings shall be lined with double thickness, cement motor lining with cement conforming to ASTM C150 Type II, AWWA C104/A21.4.90 and outside coating of bituminous coating a minimum of 2 mils. thick in accordance with AWWA C151 or C100.

207-10 STEEL PIPE

Add the following:

207-10.1 General Fabricated Steel Pipe and Fittings shall conform in all respects to Carlsbad Municipal Water District Rules and Regulations for Construction of (Potable or Reclaimed) Water Mains, latest edition.

207-10.1.2 Submittals. The Contractor shall furnish submittals in accordance with Section 2-5.3, Submittals Shop Drawings. Submittals are required for the following:

Shop Drawings	Layout Drawings
Manufacturer’s tests	Mill Reports or Plant Test Reports
Fabrication Details	Dimensional Checks
Protective Coatings	Welding Procedures/Certification for Field Welding

Shop Drawings shall be submitted and approved prior to manufacture of pipe.

207-10.1.3 Quality Assurance. Field welders shall be certified under Section IX, Part A of the ASME Boiler and Pressure Vessel Code or in accordance with AWWA C206, Section 3. Welders shall submit a copy of their certification to the District prior to performing any field welding. Certifications shall be dated within three (3) years of the job to be performed.

The top of all pipe and specials shall be clearly identified by marking the top with “T.O.P.” for easy identifications in the field. Plainly mark each length of pipe at the bell end to identify the proper location of the pipe item by reference to the layout schedule.

207-10.1.4 Protective Coatings and Linings. All steel pipe and fittings exposed within a vault or above ground shall be cement-mortar lined in accordance with AWWA C205 and C602 and painted in accordance with CMWD Approved Materials List.

All steel pipe and fittings for underground service shall be cement-mortar lined, taped wrapped and cement-mortar coated in accordance with AWWA C205, C214 and C602 unless otherwise specified on the Drawings.

Add the following section:
207-25 UNDERGROUND UTILITY MARKING TAPE.

Add the following section:
207-25.1 Detectable Underground Utility Marking Tape: Detectable Underground Utility Marking Tape shall have a minimum 0.13 mm (0.005”) overall thickness, with no less than a 35 gauge (AWG), 0.14 mm aluminum foil core. The foil must be visible from both sides. The layers shall be laminated together with the extrusion lamination process, not adhesives. No inks or printing shall extend to the edges of the tape. All printing shall be encased to avoid ink rub-off. Detectable Underground Utility Marking Tape shall conform to the properties listed in Tables 207-25(A) and 207-25 (B).

TABLE 207-25.1(A)
DETECTABLE UNDERGROUND UTILITY MARKING TAPE PROPERTIES

Property	Method	Value
Thickness	ASTM D2103	0114 mm (0.0056”)
Tensile strength	ASTM D882	4500g/cm (25 lbs/inch) (5,500 PSI)
Elongation	ASTM D882-88	<50 percent at break
Printability	ASTM D2578	>50 dynes/square centimeter
Flexibility	ASTM D671-81	Pliable hand
Inks	Manufacturing specifications	Heat-set Mylex
Message repeat	Manufacturing specifications	Every 500 mm(20”)
Foil	Manufacturing specifications	Dead soft/annealed
Top layer	Manufacturing specifications	Virgin PET
Bottom layer	Manufacturing specifications	Virgin LDPE
Adhesives	Manufacturing specifications	>30 percent, solid 1.5#/R
Bond strength	Boiling H_2O at 100 degrees Celsius	Five hours without peel
Colors	APWA Code	See Table 207-25.1 (B)

TABLE 207-25.1(B)
DETECTABLE UNDERGROUND UTILITY MARKING TAPE COLORS

Color	Utility Marked
Red	Electric power, distribution, transmission, and municipal electric systems.
Yellow	Gas and oil distribution and transmission, dangerous materials, product and steam.
Orange	Telephone and telegraph systems, police and fire communications, and cable television.
Blue	Water systems.
Green	Sanitary and storm sewer systems, nonpotable.
Brown	Force mains.
Purple	Reclaimed water lines.

Add the following section:

207-25.2 Materials Approvals. Detectable Underground Utility Marking Tape shall meet the requirements of each of the following agency/association publications.

A. Department of Transportation, Materials Transportation Bureau, Office of Pipeline Safety. USAS code for pressure piping B31.8, paragraph 192.321(e).

B. National Transportation Safety Board, Washington, DC, Special Study Prevention of Damage to Pipelines. Adopted June 7, 1974. Report NTSB-PSS-73-1.

C. American Petroleum Institute (API). Recommended practice for marking buried liquid petroleum pipelines - APR RP 1109.

D. General Services Administration, Washington, DC, Public Buildings Service Guide Specification for Mechanical and Electrical Equipment - PBS 4-1501, Amendment 2, Page 501-14, Paragraph 18, Subparagraph 18.1, Clause 18.1.1.

E. Rural Electrification Authority (REA), U.S. Department of Agriculture, Washington, DC, National Electrical Safety Code for Underground Construction for remote and immediate hazards.

SECTION 209 - ELECTRICAL COMPONENTS

209 ELECTRICAL COMPONENTS. Modify as follows: Section 86, “Signals, Lighting and Electrical Systems”, of the Caltrans Standard Specifications replaces Section 209, “Electrical Components”, and Section 307, “Street Lighting and Traffic Signals”, of the SSPWC, in all matters pertaining to the specifications for measurement, payment, warranty, materials and methods of construction of street lighting and traffic signals. Section 86 of the Caltrans Standard Specifications is unmodified excepted as specified herein. For electrical components provided and installed in systems NOT including street lighting and traffic signals, Section 209 SSPWC is unmodified except as specified in sections other than Section 209, herein.

SECTION 210 - PAINT AND PROTECTIVE COATINGS

210-1 PAINT.

210-1.5 Paint Systems. Add the following to Table 210-1.5(A)

TABLE 210-1.5 (A)

Surface to be Painted	Pre-treatment / Surface Preparation	Primer	Finish Coats
Temporary Railing type (K)	Abrasive Blast Cleaning to a Roughened, Textured Appearance	None	Two coats white Acrylic Emulsion Paint (1)

(1) acrylic emulsion paint designed for use on exterior masonry. This paint shall comply in all respects to Federal Specification TT-P-19 (latest revision), Paint, Acrylic Emulsion, Exterior. This paint may be tinted by using “universal” or “all purpose” concentrates.

210-1.6 Paint for Traffic Striping, Pavement Marking, and Curb Marking. Modify as follows: Paint for traffic lane lines, turn pocket lines, edge lines, channelizing lines, bike lane lines, chevrons, and curbs shall be rapid dry water borne conforming to CALTRANS Specification No. PTWB-01. Paint for pavement legends, pavement symbols, pavement arrows, cross walks, parking stall markings and stop bars shall be alkyd thermoplastic conforming to CALTRANS Specification No. 8010-19A. Glass beads shall be applied to the surface of the rapid dry water borne paint and the molten thermoplastic material and shall conform to the requirements of CALTRANS Specification No. 8010-004 (Type II). CALTRANS Specifications for water borne paint,

thermoplastic material and glass beads may be obtained from the CALTRANS Transportation Laboratory, P.O. Box 19128, Sacramento, CA 95819, telephone number (916) 227-7000.

210-3 GALVANIZING.

Add the following section:

210-3.6 Galvanizing for Traffic Signal Facilities. The requirements of this section shall pertain only to the preparation and galvanizing of traffic signal facilities. Galvanizing of products fabricated from rolled, pressed and forged steel shapes, plates, bars and strip 3.2 mm (1/8") thick or thicker, shall conform to the specifications of ASTM Designation: A 123, except that complete seal welding of tightly contacting surfaces of these products prior to galvanizing is required only where seal welding is shown on the plans or specified in these special provisions. Except for pre-galvanized standard pipe, galvanizing of material 3.2 mm (1/8") thick or thicker shall be performed after fabrication into the largest practical sections.

At the option of the Contractor, material thinner than 3.2 mm (1/8") shall be galvanized either before fabrication in conformance with the requirements of ASTM Designation: A 525M, Coating Designation Z600, or after fabrication in conformance with the requirements of ASTM Designation: A 123, except that the weight of zinc coating shall average not less than 365 g per square meter (1.2 oz. per ft^2) of actual surface area with no individual specimen having a coating weight of less than 305 g per square meter (1.0 oz. per ft^2).

Galvanizing of standard pipe shall conform to the requirements of ASTM Designation: A 53. Galvanizing will not be required for stainless steel, monel metal and similar corrosion resistant parts.

Fabrication shall include all operations such as shearing, cutting, punching, forming, drilling, milling, bending, welding and riveting. All welded areas shall be thoroughly cleaned prior to galvanizing to remove all slab or other material that would interfere with the adherence of the zinc. When it is necessary to straighten any sections after galvanizing, the work shall be performed without damage to the zinc coating.

Galvanizing of iron and steel hardware and nuts and bolts, when specified or shown on the plans, shall conform to the specifications of ASTM Designation: A 153, except whenever threaded studs, bolts, nuts, and washers are specified to conform to ASTM Designation: A 307, A 325, A 325M, A 449, A 563, A 563M, or F 436 and zinc coating is required, they shall be hot-dip zinc coated or mechanically zinc coated in accordance with the requirements of the ASTM Designations. Unless otherwise specified, galvanizing shall be performed after fabrication. Components of bolted assemblies shall be galvanized separately before assembly. Tapping of nuts or other internally threaded parts to be used with zinc coated bolts, anchor bars or studs shall be done after galvanizing and shall conform to the requirements for thread dimensions and overtapping allowances in ASTM Designation: A 563 or A 563M. When specified, painting of zinc coated surfaces shall be in accordance with the procedures in Section 210.1 "Paint". Galvanized surfaces that are abraded or damaged at any time after the application of the zinc coating shall be repaired by thoroughly wire brushing the damaged areas and removing all loose and cracked coating, after which the cleaned areas shall be painted with two applications of unthinned zinc-rich primer (organic vehicle type) conforming to the provisions in Section 210-3.5, "Repair of Damaged Zinc Coating." Aerosol cans shall not be used.

SECTION 212 - LANDSCAPE AND IRRIGATION MATERIALS

212-1 LANDSCAPE MATERIALS.

212-1.2.3 Commercial Fertilizer. Add the following: Preplant fertilizer shall be granular commercial fertilizer 7-7-7 or approved equal. Postplant fertilizer shall be 12-4-6 or approved equal with Ca, Fe, Zn, and Mn and with the majority of nitrogen in nonammoniac form to prevent acidification of soil. Planting tablets shall be compressed fertilizer tablets with a 20-10-5 analysis. Hydroseed fertilizer shall be long-lasting, controlled-release, plastic-coated, uniform in composition, free-flowing, suitable for application with approved equipment, and shall contain the minimum available percentages of nitrogen, phosphoric acid, potash and sulfur required by tables 212-1.2.5.1(A) through 212-1-2-5-3(A).

212-1.2.4 Organic Soil Amendment. Add the following: For all types of Organic Soil Amendment mulch materials produced from pine trees grown in Alameda, Monterey, Santa Clara, Santa Cruz or San Mateo Counties shall not be used in the Work. Type 1A Organic Soil Amendment shall conform to the requirements for type 1 Organic Soil Amendment except as modified hereinafter. Type 1A Organic Soil Amendment shall be a wood or rice residual product derived from the bark of pine, white fir, or red fir or cedar or redwood shavings or rice hulls. Type 1A Organic Soil Amendment shall be manufactured from clean wood, free from clods coarse objects and rocks and shall conform to the properties shown in Table 212-1.2.4(B):

Table 212-1.2.4(B)
SOIL AMENDMENT PROPERTIES

Property	Minimum	Maximum
Dry Weight Nitrogen	(1)	(1)
Dry Weight Passing 25 mm (1”) Sieve	100%	100%
Dry Weight Passing #4 Sieve	95%	100%
Dry Weight Passing #16 Sieve	45%	65%
Dry Weight Passing #30 Sieve	30%	40%
Dry Weight Passing #50 Sieve	0%	10%
Dry Weight Passing #100 Sieve	0%	2%
Salinity	(1)	(1)
Iron (Dilute acid soluble on dry weight basis)	0.08%	---
Ash (dry weight basis)	0%	6.0%
pH	6.0	7.0
Wettability	(1)	(1)

(1) (As Required by Table 212-1.2.4(A) SSPWC)

For all types of Organic Soil Amendment the Contractor shall supply the Engineer a sample of the proposed amendment accompanied by an analytical analysis from a qualified agricultural laboratory certifying compliance to the requirements herein. Qualified agricultural laboratories shall have an on-going quality assurance program that fulfills the requirements of the most recent version of the “Western States Laboratory Proficiency Testing Program Soil and Plant Analytical Methods”. Certificates of compliance shall contain a statement attesting that the organic soil amendment meets the requirements of these specifications and that the testing agricultural laboratory does fulfill the requirements of “Western States Laboratory Proficiency Testing Program Soil and Plant Analytical Methods”. Said submittal shall be in accordance with Section 2-5.3.3.

212-1.2.5 Mulch for Hydraulic Method Seed Lawn Planting. Add the following: The terms Hydroseeding and Hydroseed shall be synonymous with Hydraulic for the purposes of Section 212. Disturbed Areas planting areas shall be mulched, fertilized and seeded using method B. Mulch shall be manufactured from virgin wood cellulose fiber mulch and shall not contain growth or germination inhibitors. When mixed with water, the mulch shall remain in uniform suspension and when blended with the seed, fertilizer, and other approved additives, shall form a homogeneous slurry. When applied, the fibers shall form a moisture absorbing membrane with adequate percolation properties sufficient to allow one hundred percent of water applied at the rate of 3.1 liters per minute per square meter (0.075 gallons per minute per square foot) onto a surface inclined at a 2:1 (horizontal: vertical) slope to pass through the membrane. A non-phyto-toxic wetting agent shall be added to the slurry mixture. A water soluble, non-toxic green dye shall be added in sufficient quantity to clearly delineate the planted areas. When required, binder shall be added to the slurry mixture and shall be “CPA 4000”, “AZTAC”, “Ecology Control”, “M-Binder”, or approved equal.

Add the following section:
212-1.2.5.1 Disturbed Area Mulch Fertilizer and Additives. In addition to the seed mix shown in the table for Disturbed Areas the slurry mixture shall be applied at the rates shown in Table 212-1.2.5.1(A)

Table 212-1.2.5.1(A)
DISTURBED AREA MULCH FERTILIZER AND ADDITIVES

Component	Application Rate	
	grams per sq. meter	(pounds per acre)
Virgin Wood Cellulose Fiber Mulch	225	(2000)
Binder (1)	7	(60)
Fertilizer (16-20-0) Ammonium Phosphate Sulfate, Plus 15% Soil Sulfur	35	(300)
Wetting Agent	Per Mfg. Recommendation	
Green Colorant	Per Mfg. Recommendation	

(1) Required to be incorporated only when applied between the months of Nov. through Feb.

Add the following section:
212-1.2.6 Herbicides and Pesticides. Shall be used in their appropriate applications with strict adherence to manufacturer’s specifications and instructions. Postemergent herbicide for all areas shall be Glyphosate, N-(phosphonomethyl) glycine, in the form of its isopropylamine salt such as Roundup Pro, Diquat, Montar, or approved equal. Preemergent herbicide for shrubs and groundcover areas planted from flats shall be Treflan, Surflan, Eptan, or approved equal.

Add the following section:
212-1.2.7 General Soil Conditioners. Agricultural-grade gypsum shall be a calcium sulfate ($CaSO_4$ H_20) product - 94.3 percent. 90 percent shall pass a 50-mesh screen. Control of dust during application is mandatory.

Iron Sulfate shall be ferrous sulfate in pelletized or granular form containing not less than 20.0 percent iron expressed as metallic iron. Iron Sulfate pellets shall be of size and gradation such that 98 percent is retained on a 10-mesh screen.

Add the following section:
212-1.2.8 Stabilizing Emulsion. Stabilizing emulsion shall be a concentrated liquid chemical that forms a plastic film upon drying and allows water and air to penetrate. The film shall be nonflammable and shall have an effective life of at least one year. Stabilizing emulsion shall be nontoxic to plant and animal life and nonthinking to concrete or painted surfaces. In the cured state the stabilizing emulsion shall not be re-emulsifiable. The material shall be registered with, and licensed by the California, Department of Food and Agriculture, as an "auxiliary soil chemical". Stabilizing emulsion shall be miscible with water at time of mixing and application.

212-1.3 Seed. Add following: The quantity of pure live seed supplied shall meet or exceed the quantity shown in the specified mixes. Seed shall not contain more than 0.5 percent weed seed by volume Seed types shall be as specified on the plans and planting legends and shall be applied at the rates indicated.

All brand-name, patented seed must be received by Contractor in original manufacturer's bag. Seed shall be received by Contractor in separate containers specifying kind, quantity, purity, and germination. Contractor shall provide the Engineer with each seed bag label used in the Work.

Add the following section:
212-1.3.1 Seed for Disturbed Areas. Hydroseeding mix for Disturbed Areas shall consist of no less than the seed varieties shown in Table 212-1.3.1 (A).

Table 212-1.3.1(A)
SEED FOR DISTURBED AREAS

Seed Variety	Application Rate	
	grams per sq. meter	(pounds per acre)
Rose Clover	2.5	20 (1)
Festuca Megalura, Zorro Fescue	2.5	20
Eschscholzia Californica	0.35	3
Achillea Millefolia	0.45	4
Alyssum (Carpet of Snow)	0.35	3
Dimorpholeca	0.25	2

(1) Rose Clover shall be inoculated with a nitrogen fixing bacteria and be applied dry either by drilling or broadcasting immediately before hydraulic application of the remaining seed mix and mulch.

212-1.4.1 General. Add the following: Plants shall be the variety and size shown on the plans or in the special provisions and shall conform to the requirements of these specifications. Contractor shall notify the Engineer 48 hours before each plant delivery so that the Engineer can inspect the plants. The scientific and common names of plants herein specified shall conform to the approved names given in "A Checklist of Woody Ornamental Plants in California, Oregon and Washington" published by the University of California, Division of Agriculture Sciences, Publication 4091 (1979). Each group of plant materials delivered on site shall be labeled clearly as to species and variety. All patented plants (cultivars) required by the plant list shall be delivered with a proper plant patent attached. The Contractor shall obtain clearance from the County Agricultural Commissioner, as required by law, before planting plants delivered from outside the County in which they are to be planted. Evidence that clearance has been obtained shall be filed with the Engineer. All plants furnished by the Contractor shall be true to type or name as shown on the plans and shall be tagged identifying the plants by species or variety; however, determination of plant species or variety will be made by the Engineer and the Engineer's decision shall be final. Plants

shall be individually tagged or tagged in groups by species or variety. Carpobrotus cuttings need not be tagged. All plants shall comply with Federal and State laws requiring inspection for plant diseases and infestations. Inspection certificates required by law shall accompany each shipment of plants, and certificates shall be delivered to the Engineer.

Plants furnished by the Contractor shall be healthy, shapely, and well-rooted, and roots shall show no evidence of having been restricted or deformed at any time. Plants shall be well-grown, free from insect pests and disease, and shall be grown in nurseries which have been inspected by the State Department of Food and Agriculture and have complied with the regulations thereof.

The Engineer is the sole judge as to acceptability of each plant. Vigorous, healthy, well-proportioned plants are the intent of this specification. Plants which are even moderately "overgrown" or are showing signs of decline or lack of vigor, are subject to rejection. The size of the plants will be as shown on the plans. Plants larger in size than specified may be used with the approval of the Engineer, but the use of larger plants will make no change in contract price. If the use of larger plants is approved, soil amendments shall be increased proportionately. All plants not conforming to the requirements herein specified shall be considered defective and such plants, whether in place or not, shall be marked as rejected, and immediately removed from the site and replaced with new plants by the Contractor at the Contractor's expense. The Engineer reserves the right to change the species, variety, and/or sizes of plant material to be furnished, provided that the cost of such plant changes do not exceed the cost of plants in the original bid, and with the provision that the Contractor shall be notified in writing, at least 60 days before the planting operation has commenced.

No plant shall be transported to the planting area that is not thoroughly wet throughout the ball of earth surrounding the roots. Any plant that, in the opinion of the Engineer, has a damaged root ball or is dry or in a wilted condition when delivered to the planting area will not be accepted, and shall be replaced by the Contractor at the Contractor's expense. Each plant shall be handled and packed in the approved manner for that species or variety, and all necessary precautions shall be taken to ensure that the plants will arrive at the site of the work in proper condition for successful growth. Trucks used for transporting plants shall be equipped with covers to protect plants from windburn.

Root condition of plants furnished by the Contractor in containers will be determined by removal of earth from the roots of not less than 2 plants nor more than 2 percent of the total number of plants of each species or variety, except when container-grown plants are from several sources, the roots of not less than 2 plants of each species or variety from each source will be inspected by the Engineer. In case the sample plants inspected are found to be defective, the Agency reserves the right to reject the entire lot or lots of plants represented by the defective samples. Any plants rendered unsuitable for planting because of this inspection will be considered as samples and will not be paid for.

The Contractor shall notify the Engineer when plants are to be shipped to the project site. The notification shall be given not less than 10 days prior to the actual shipment date.

Carpobrotus cuttings shall be 250 mm (10") or more in length and shall not be rooted. Delosperma cuttings shall be 150 mm (6") or more in length and shall not be rooted. Cuttings shall be tip cuttings from healthy, vigorous and strong-growing plants and shall be insect and disease free. Mature or brown-colored stem growths or cuttings which have been trimmed will not be accepted. Cuttings shall be planted not more than 2 days after cutting and shall not be allowed to dry or wither.

Carpobrotus cuttings shall not be taken from any plants that indicate the presence of ice plant scale (Pulvinaria species).

The Contractor shall notify the Engineer of the location where cuttings are to be taken at least 10 days prior to taking the cuttings and shall be responsible for all permit and inspection fees involved in obtaining cuttings.

212-1.5.3 Tree Stakes. Modify as follows: Tree stakes shall be 50mm (2”) diameter turned lodge-pole pine, pointed on their driven end.

Add the following section:
212-1.6 Erosion Control Matting. Erosion control matting shall be made of 100-percent-biodegradable, weed-free wheat straw of thickness and density yielding 270 grams per square meter (0.50 lb./sy) with photodegradable polypropylene netting with a density of 0.89 grams per square meter (1.64 lb/1000 sy) having an approximate mesh interval of 50 mm x 50 mm (2“ x 2“) on each face of the straw mat. The straw mat shall be sewn together with unidirectional lines of cotton or polypropylene thread spaced approximately 50 mm (2”) apart. Erosion control matting shall be “North American Green, DS150”, “BonTerra S2”, or approved equal.

Add the following section:
212-1.7 Erosion Control Mat Staples. Erosion control mat staples shall be 25 mm x 150 mm (1” x 6”), U-shaped 11-gauge mild steel staples.

Add the following section:
212-1.8 Root Barriers. Root barriers shall be no less than 1m (39“) in width. Root barriers shall be “Biobarrier”, as manufactured by Reemay, Inc., 70 Old Hickory Boulevard, Old Hickory, TN 97138, Phone 615-847-7000, no substitutes will be accepted.

212-2 IRRIGATION SYSTEM MATERIALS.

212-2.1.3 Plastic Pipe for Use with Solvent Weld Socket or Threaded Fittings. Add the following: Except as provided in this section, all buried piping in the irrigation system shall be installed with underground utility marking tape conforming to the requirements of section 207-21 and identifying it as reclaimed water. Intermittent pressure lines (lines on the downstream side of a controller valve that will not be subject to constant pressure) will not require underground utility marking tape. All PVC pipe used for irrigation systems shall be colored purple by the addition of a dye integral to the PVC. Painted pipe will not be accepted. Pressure mainline piping for sizes 50 mm (2”) and larger shall be PVC having a pressure rating of 2170 kPa (315 PSI), S.D.R. 13.5. Stenciled pipe is required for all irrigation system piping including portions not required to be marked with underground utility marking tape. All pipe shall have stenciling appearing on both sides of the pipe with the marking “Reclaimed Water” in 16 mm ($^5/_8$”) high letters repeated every 300 mm (12“). PVC non-pressure buried lateral line piping shall be PVC Schedule 40.

Add the following section:
212-2.1.7 Brass Pipe and Fittings. Brass pipe shall be IPS standard weight 125 LB 85 percent copper and 15 percent zinc, trade designation seamless red brass pipe conforming to the requirements of ASTM B43-91. Brass pipe fittings and connections shall be Standard 125 LB class 85 percent red brass fittings and connections.

212-2.2.7 Valve Boxes. Add the following: All valve boxes shall be marked “RCV”, “BV” or “QC”, “PB” respectively. Remote control valves shall be marked with station numbers embossed on the valve cover with a brass tag. (RCV boxes shall have locking covers.) Other boxes such as pull boxes, etc., shall be marked with appropriate identification.

Add the following section:
212-2.2.8 Ball Valves. Ball valves shall have bottom-loaded pressure-retaining stems, glass-reinforced seats, and reinforced TFE stem packing seals. Valves sizes 13 mm (½“) to 50 mm (2“) shall be pressure rated at 4140 kPa (600 PSI) WOG and 1030 kPa (150-PSI) saturated steam. Each valve shall be tested, air under water, in the opened and closed position by the manufacturer. Ball valve must conform to Federal Specification WW-V-35B, Type II, Class A, Style 3, End Connection A or C.

Add the following section:
212-2.2.9 Pressure Regulator Valve. Pressure regulator valve shall be bronze body with screw fitting.

Add the following section:
212-2.2.9 Wye Strainers. Wye strainers shall have a cast iron or all-bronze body with a removable stainless steel or monel strainer. Wye strainers shall be capable of withstanding a cold water working pressure of 1034 kPa (150 psi). Wye strainers at backflow preventer assemblies shall be equipped with a gate valve at the outlet. All other wye strainers shall be equipped with a garden valve at the outlet.

The strainer screen for the wye strainer in a backflow preventer assembly shall have an open area equal to at least 3 times the cross-sectional area of the pipe based on an iron pipe size and shall be woven wire fabric with 850-µm mesh or perforated sheet with 1.14 mm (0.045”) diameter holes.

All other wye strainers shall be equipped with 425-µm strainer screens.

212-2.4 Sprinkler Equipment. Add the following: All sprinkler heads are to have factory built-in check valves or a check valve under each head. Drip assemblies shall meet the following requirements: The drip emitter shall be Pepco Quadra or Rainbird XERI-Bird-8 or approved equal as called on drawings, with four ports. Drip tubing for emitter outlets shall be Rainbird (RBT-160V), Salco, or approved equal. Drip tubing stakes shall be Rainbird No. RS-13, Salco, or approved equal. Bug cap for drip tubing shall be manufactured by Rainbird, Pepco, or approved equal. The drip pressure regulator shall be Rainbird, Netafim PVR, or approved equal. Drip emitter filter shall be Amiad, Rainbird, or approved equal. Drip emitter access boxes shall be Rainbird No. SEB-6X, Salco Subterranean Emitter Box, or approved equal. Check valves shall be of heavy-duty virgin PVC construction with FIP thread inlet and outlet. Internal parts shall be stainless steel and neoprene. Antidrain valves shall be field adjustable against drain out from 1.5 m to 12 m (5’ to 40’) of head. All sprinkler heads that are without valves in the heads are to have an antidrain valve feature and shall have an excess flow feature, which will automatically stop the flow of water when it exceeds the GPM preset by the manufacturer. Check valves shall be King Bros., Rainbird, or approved equal.

212-2.3 Backflow Preventer Assembly. Add the following: Backflow preventers shall be one of the approved reduced pressure principle devices listed by the California Department of Health Services, Division of Drinking Water and Environmental Management, 601 North 7th Street, Mailing Station (MS) 92, P.O. Box 942732, Sacramento, CA 94234-7320.

Backflow preventers shall be factory assembled and shall include 2 check valves, one pressure differential relief valve, 2 shut-off valves and 4 test cocks. Backflow preventer and valves shall be the same size as the pipeline in which they are installed, unless otherwise shown on the plans. Backflow preventer shut-off valves shall be manufactured from iron or bronze and shall be either resilient wedged gate valves, resilient seated and fully ported ball valves, or resilient seated butterfly valves. Threaded type shut-off valves shall be provided with a union on one side of each valve. Unions shall be brass or malleable iron.

Add the following section:
212-2.4.1 Additional Equipment. Contractor shall provide the following items to the Engineer:

1. Two control valve keys.
2. Two wrenches for removing each different type of sprinkler head.
3. Two quick coupler keys. The keys and hose ells shall be of the same manufacturer as the coupling valve.
4. Five keys for opening and locking each automatic controller and enclosure.

Add the following section:
212-2.5 Flexible Hose. Flexible hose shall be nonrigid polyvinyl chloride (nonrigid PVC) hose conforming to the specifications of ASTM Designation: D 2287, Cell-type 6464500.

Wall thicknesses of nonrigid PVC hose shall conform to Table 212-2.5(A) when determined in accordance with ASTM Designation: D 2122.

TABLE 212-2.5(A)
FLEXIBLE HOSE

Hose Size-Nominal		**Minimum Wall Thickness***		**Range**
(Millimeters)	(Inches)	(Millimeters)	(Inches)	(Percent)
15	$^5/_8$	3.73	0.147	12
20	$^3/_4$	3.91	0.154	12
25	1	4.55	0.179	12

*as measured at any point on the cross section.

The hose shall provide leak-free, non-separating connections suitable for the purpose intended when connected to the fittings specified herein. Fittings for flexible hose shall be injection molded PVC, Schedule 40, conforming to the specifications of ASTM Designation: D 2466. Fittings shall be solvent cemented type. Solvent cement for flexible hose and fittings shall be of commercial quality specifically manufactured for use with nonrigid PVC hose. Primer for flexible hose fittings shall be the same as specified for plastic pipe supply line fittings.

212-3 ELECTRICAL MATERIALS.

212-3.1 General. Add the following: All electrical materials shall conform to the requirements of the 1996 National Electrical Code.

212-3.2.2 Conductors. Add the following: Low voltage electric wiring running from controller to the automatic control valves shall be no smaller than No. 14 solid single conductor, copper wire, 0.015 mm (60 mil) insulation, 0.015 mm (60 mil) neoprene jacket, style UF (Direct Burial), or equal, color code wires to each valve. Neutral wires shall be white, no smaller than No. 12 solid

single conductor wire, 0.015 mm (60 mil) insulation, 0.015 mm (60 mil) neoprene jacket, style UF (Direct Burial).

212-3.3 Controller Unit. Add the following: All controllers shall be grounded by one 19 mm (5/8”) diameter by 3 m (10’) long stainless steel grounding rod and a 50-ohm resistance lightning arrestor.

Add the following section.
212-3.4 Irrigation Electrical Service Equipment and Enclosures. Electrical service equipment shall incorporate the following elements:

1. One 100-amp, 120/240-volt, single-phase load center, as approved by the Engineer;
2. One 100-amp rated commercial meter socket suitable for the San Diego Gas and Electric Company meter, with provision for test block bypass having a UL listing and EUSERC approval;
3. One 15-amp circuit breaker for each irrigation controller energized by the service;
4. One 20-amp circuit breaker for the duplex receptacle.
5. The design, assembly, grounding, wiring, and components of the irrigation electrical service equipment and enclosure shall meet the requirements of the 1996 edition of the National Electrical Code.
6. Electrical service equipment shall be enclosed in a cabinet constructed entirely of 14-gage, or heavier, 304 stainless steel. The cabinet shall be of welded construction with a brushed finish; anchoring points shall be inside the enclosure.
7. The cabinet shall be HYDROSAFE Model No. HS9, Strong Box, or approved equal.
8. The cabinet shall have a 304 stainless steel interior bulkhead separating the 120/240-volt electrical service section from the irrigation controller section.
9. No wood components shall be used in the enclosure.
10. Each section of the cabinet shall have full front opening doors with piano hinges, integral keylock and hasp and staple, or other provision, for padlock.
11. The cabinet shall be provided with cross-flow ventilation. Ventilation openings shall be located and designed to preclude rain, irrigation splash, vermin, and insects from entering the cabinet.
12. The controller side door shall have provision for mounting control schematics without the use of adhesives or fasteners. The service side door shall have a clear acrylic plastic window to allow the electrical meter to be read.
13. The cabinet shall have a duplex 15-amp, 120-volt receptacle with ground fault interrupter protection mounted on the interior service side.
14. Concrete footings and pads supporting the Electrical service equipment shall be 560-C-3250 and shall be no less than 150 mm (6“) thick.
15. Anchor bolts to secure the service equipment to the concrete pad shall be 10 mm (3⁄8“) diameter by 150 mm (6“) long hot dip galvanized or stainless steel headed bolts with washers, without sleeves, conforming to section 304-1.7. Anchor bolts to secure the service equipment to the concrete pad shall be embedded in the concrete slab between 65 mm and 100 mm (2½” and 4“).

SECTION 214 PAVEMENT MARKERS

214-5 REFLECTIVE PAVEMENT MARKERS

Add the following section:
214-5.1 Temporary Reflective Pavement Markers. Temporary pavement markers shown on the plans and required in the specifications shall be one of the types shown in Table 214-5.1(A), or equal thereto.

TABLE 214-5.1(A)
TEMPORARY REFLECTIVE PAVEMENT MARKERS

Type	Manufacturer of Distributor
TOM- Temporary Overlay Markers	Davidson Traffic Control Products, 3110 70th Avenue East, Tacoma, WA 98424, (877) 335-4638

Add the following section:
14-5.2 Permanent Reflective Channelizer. Reflective Channelizer shall be new surface-mounted type and shall be furnished, placed, and maintained at the locations shown on the plans. Reflective channelizer posts shall be orange in color. Reflective channelizers shall have affixed white reflective sheeting as specified in the special provisions. The reflective sheeting shall be 75 mm x 300 mm in size. The reflective sheeting shall be visible at 300 m at night under illumination of legal high beam headlights, by persons with vision of or corrected to 20/20. Reflective channelizer shall be one of the types shown in Table 214-5.2(A), or equal thereto.

TABLE 214-5.2(A)
REFLECTIVE CHANNELIZER

Type	Manufacturer of Distributor
Safe-Hit SH336SMA	Safe-Hit, A Division of Energy Absorption Systems, Inc. 35 East Wacker Drive, Suite 1100 Chicago, IL 60602 (800) 537-8958
Carsonite "Super Duck" SDR3036	Carsonite Composites, LLC 605 Bob Gifford Boulevard Early Branch, SC 29916 (800) 648-7916
Repo "The Replaceable Post"	Western Highway Products 10680 Fern Avenue Stanton, CA 90680 (800) 854-3360

The Contractor shall provide the Engineer with a Certificate of Compliance in accordance with the provisions of Section 2-5.3.3 “Submittals”. Said certificate shall certify that the permanent reflective channelizers comply with the plans and specifications and conform to the prequalified design and material requirements approved by the engineer and were manufactured in accordance with the approved quality control program.

SECTION 215 - FENCING

Add the following section:
215-1 ENVIRONMENTAL FENCING

Add the following section:
215-1.1 Materials. Environmental fence shall be minimum 4’ high, orange colored plastic construction fencing installed prior to performing any work. Environmental fence shall be constructed of non-toxic, non-conductive polyethylene capable of withstanding temperatures from –58F degrees to 194F degrees. Color shall be non-fading. Posts shall be 6’-6” long, shall be spaced no more than 10’-0” apart and buried portion shall be no less than 2’-6” deep. Used materials may be installed providing the used materials are good, sound, and are suitable for the purpose intended, as determined by the Engineer. Materials may be commercial quality providing the dimensions and sizes of the materials are equal to, or greater than, the dimensions and sizes specified herein. Posts shall be either metal or wood at the Contractor's option. Galvanizing and painting of steel items will not be required. Treating wood with wood preservatives will not be required. Concrete footings for metal posts will not be required.

SUPPLEMENTAL PROVISIONS
TO
STANDARD SPECIFICATIONS FOR PUBLIC WORKS CONSTRUCTION
PART 3, CONSTRUCTION METHODS

SECTION 300 - EARTHWORK

300-1 CLEARING AND GRUBBING.

300-1.1 General. Add the following to the third paragraph: During surface clearing operations, the Contractor shall not cover or bury any plant growth or other objectionable materials. If the Contractor cannot successfully separate the plant growth from the surface soil and advertently or inadvertently mixes organic or other objectionable materials with the soil, the soil so contaminated shall be removed from the site by the Contractor. All costs, if any, associated with removing the soil mixed with organic or other objectionable materials and importing soil to replace said contaminated soil shall be borne by the Contractor and no additional payment therefore shall be made to the Contractor.

300-1.3 Removal and Disposal of Materials. Add the following: Also included in clearing and grubbing shall be removal and disposal of existing street poles and lights, metal guard rail, fences, asphalt concrete and aggregate base, concrete curb and gutter, concrete sidewalk, existing gate, existing headwalls, rip-rap, traffic signs, and other existing features which interfere with the work. Whether or not such items are shown on the plans they shall be removed as a part of clearing and grubbing. Existing underground pipes and conduits that are shown on the plans and designated to be removed shall be removed by the Contractor as a part of clearing and grubbing.

300-1.4 Payment. Modify as follows: Payment for clearing and grubbing shall be made at the contract lump sum price for clearing and grubbing within the project limits and at stockpile locations and no other payments will be made. Unless otherwise noted on plans, the Contractor shall remove all existing abandoned pipelines and conduits of any type, or use, and pipelines and conduits of any type, or use, that are abandoned during the course of the work and shall replace said pipelines and conduits with properly compacted soils. Payment for removal and disposal of abandoned utilities shall be included in the lump-sum bid for Clearing and Grubbing, and no additional payment will be made.

300-2 UNCLASSIFIED EXCAVATION.

300-2.1 General. Add the following: Unclassified excavation shall include removal and stockpile of suitable material, recompaction, mixing, grading for mitigation work, trenching and backfilling of storm drains, sewers, other utilities, disposal of unsuitable materials not included in the bid item for clearing and grubbing, all cut and fill including removal and recompaction of unsuitable soil, salvaging clean excavated material and filling areas to the required grades and cross section. Unclassified excavation shall be utilized onsite to make all fills shown on the plans. Unclassified excavation shall also include scarification and moisture adjustment and compaction of the top 300 mm (1') of the subgrade in the roadway prism in cut areas to 95 percent relative compaction,

wetland mitigation grading and attendant work, export of remaining excess material to a disposal site or spoil area acquired by the Contractor and pumping and disposal of storm and ground water.

300-2.2.1 General. Add the following: Alluvial and colluvial removal and recompaction shall consist of excavating, blending and recompacting loose soils in areas that are designated to receive fills. The existing loose soils shall be removed by the Contractor until a firm unyielding surface is exposed or to a depth determined by the Engineer. If the excavated material contains 4%, or more, water than the optimum moisture content the Contractor shall blend the wet soil with soils having a lower moisture content and/or spread the excavated material in a manner that enables the material to dry to optimum moisture content. The cost of spreading and/or drying shall be included in the contract unit price for removal and recompaction. The excavated material shall be placed and compacted in accordance with section 300-4 of the specifications except that section 300-4.9, Measurement and Payment, shall not apply.

300-2.2.1 General. Add the following to the first paragraph: Such direction may include, but is not limited to, directing the Contractor to blend, adjust moisture content of, rework, and place unsuitable soils at specific locations or elevations on the site.

Add the following section:
300-2.2.3 Compressible Soil. Compressible soils such as existing uncontrolled or unacceptable fill, alluvium, and colluvium may exist within portions of the Project site. Where required by the Engineer, the Contractor shall remove such compressible soils from areas to receive fill or from areas upon which surface improvements are to be placed. The removal and disposal of such compressible soils shall be paid for at the Contract Unit Price for unclassified excavation unless it is considered otherwise unsuitable by the Engineer in which case it may be paid for in accordance with section 300-2.2.1.

300-2.2.4 Instability of Cuts. Add the following: The Contractor shall remove additional material as directed by the Engineer to improve the stability of excavated cuts. The removal of such excavated material shall be paid for at the Contract Unit Price for unclassified excavation unless it is considered otherwise unsuitable by the Engineer, in which case it will be paid for in accordance with Subsection 300-2.2.1.

300-2.5 Slopes. Add the following: The hinge points (the top and bottom) of slopes shall be located within 75 mm (0.25') of the locations shown on the plans.

300-2.5 Slopes. Add the following: after the first sentence of the first paragraph: A slope shall be defined as any area steeper than three horizontal to one vertical.

300-2.6 Surplus Material. Add the following: The Contractor shall haul and dispose of all surplus material from the project. The Contractor shall utilize highway legal haul trucks for this export of material from the project site and to a site secured by the Contractor. No earth moving equipment or special construction equipment, as defined in section 565 of the California Vehicle Code, will be allowed for hauling material on public streets.

Add the following section:
300-2.10 Grading Tolerance. The Contractor shall finish excavated areas other than slopes and subgrade below structures, within the roadway and sidewalk areas within 30 mm (0.1') of the grades shown on the plans. Subgrade tolerances shall conform to the requirements of section 301-1.4 SSPWC.

300-3 STRUCTURE EXCAVATION AND BACKFILL

300-3.1 General. add the following: The Contractor shall excavate to the lines and levels required and/or shown on the Drawings. The Contractor shall provide all shoring, bracing, cribbing, pumping, and planking required. The Contractor shall excavate and maintain the bottom of all trenches in a condition that is level, firm, clean and free from all debris or foreign matter. Excavations shall be kept free from water at all times. The Contractor shall remove any unsuitable material encountered below grade as directed by the Engineer.

300-3.6 Payment. Add the following: Dewatering shall be paid for as an incidental to excavation and backfill. and no additional compensation will be made therefore. Except for unsuitable materials removed as part of the clearing and grubbing item unsuitable material encountered below grade will be paid for at the lump sum bid price for each site.

300-9 GEOTEXTILES FOR EROSION CONTROL. Modify as follows: **300-9 GEOTEXTILES FOR EROSION CONTROL AND WATER POLLUTION CONTROL.**

Add the following section:
300-9.2 General. The Contractor shall provide erosion control and water pollution control conforming to the requirements shown on the plans, as specified herein, and as elsewhere required by the Contract Documents. Erosion control and water pollution control shall include the work specified herein, and such additional measures, as may be directed by the Engineer, to meet Best Management Practices, as defined herein, and to properly control erosion and storm water damage of the limits of work and construction impacts upon areas receiving drainage flows from within the limits of work.

Add the following section:
300-9.2.1 Grading Controls. The Contractor shall protect all areas that have been graded and/or cleared and grubbed as well as areas that have not been graded and/or cleared and grubbed within the limits of work from erosion. The Contractor shall provide temporary earth berms, gravel bags, silt fences, stabilized construction entrances and similar measures, coordinated with its construction procedures, as necessary and as shown on the plans to control on site and off site erosion during the construction period. The Contractor will be required to protect areas which have been cleared and grubbed prior to excavation or embankment operations, and which are subject to runoff during the duration of the contract. The criteria used to determine the appropriate erosion control measures shall be the “Best Management Practices”, hereinafter BMP, defined and described in the, "Stormwater Best Management Practices Handbook, Construction", January 2015 edition as published by the California Stormwater Quality Association. The Contractor shall maintain a copy of the "Stormwater Best Management Practices Handbook, Construction", January 2015 edition on the project site and shall conduct its operations in conformity to said Handbook.

Temporary erosion control measures provided by the Contractor shall include, but not be limited to, the following:

a) Embankment areas, while being brought up to grade and during periods of completion prior to final roadbed construction, shall be graded so as to direct runoff into impoundment areas within the limits of work where such runoff shall have pollutants removed by BMP methods.
b) The Contractor shall provide protection by BMP measures to eliminate erosion and the siltation of downstream facilities and adjacent areas. These measures shall include but shall not be limited to: temporary down drains, either in the form of pipes or paved ditches with protected outfall berms; graded berms around areas to eliminate erosion of embankment slopes by

surface runoff; confined ponding areas to desilt runoff; and to desilt runoff.

c) Excavation areas, while being brought to grade, shall be protected from erosion and the resulting siltation of downstream facilities and adjacent areas by the use of BMP measures. These measures shall include, but shall not be limited to, methods shown on the plans and described herein.

Add the following section:

300-9.2.2 Payment. Full compensation for performing erosion control and water pollution control, conforming to the operational requirements herein, of the BMP and conforming to the requirements of the Federal Water Pollution Control Act, including the latest amendments thereto, which is not a part of the planned permanent work or included as a separate bid item shall be considered as included in the contract price bid for unclassified excavation, and no additional compensation will be allowed therefore.

300-13 STORM WATER POLLUTION PREVENTION PLAN

Add the following section:

300-13.1 Storm Water Pollution Prevention Plan. As part of the storm water pollution prevention work, the Contractor shall prepare and submit Storm Water Pollution Prevention Plan, hereafter referred to as the "SWPPP,". The SWPPP shall conform to the requirements of the “Greenbook” Standard Specifications for Public Works Construction, the requirements in the California Storm Water Quality Association, Stormwater Best Management Practice Handbook, Construction (“Handbook”), the requirements of the Permit, the requirements in the plans and these supplemental provisions.

300-13.1.1 SWPPP Document

Within 15 calendar days after the execution of the contract, the Contractor shall submit 3 copies of the SWPPP to the Engineer, in accordance with Section 2-5.3.3 of these Special Provisions. Contractor will be provided the digital format for SWPPP to complete required sections. If revisions are required, as determined by the Engineer, the Contractor shall revise and resubmit the SWPPP within 15 days of receipt of the Engineer’s comments and shall allow 5 days for the Engineer to review the revisions. Upon the Engineer’s acceptance of the SWPPP, 3 additional copies of the SWPPP, incorporating the required changes, shall be submitted to the Engineer. In order to allow construction activities to proceed, the Engineer may conditionally approve the SWPPP while minor revisions are being completed.

The objectives of the SWPPP shall be to identify pollution sources that may adversely affect the quality of storm water discharges associated with the project and to identify, construct, implement and maintain storm water pollution prevention measures, hereafter referred to as control measures, to reduce to the extent feasible pollutants in storm water discharges from the construction site both during and after construction is completed under this contract.

The SWPPP shall incorporate control measures in the following categories:

1. Soil stabilization practices;
2. Sediment control practices;
3. Wind erosion control practices; and
4. Non-storm water management and waste management and disposal control practices.

Specific objectives and minimum requirements for each category of control measures are contained in the Handbook.

The Contractor shall designate a Water Pollution Control Manager who will have the responsibilities outlined in the SWPPP.

The SWPPP shall include, but not be limited to, the following items as described in the SWPPP:

1. Source Identification;
2. Erosion and Sediment Controls;
3. Non-Storm Water Management;
4. Waste Management and Disposal;
5. Maintenance, Inspection and Repair;
6. Training;
7. List of Contractors and Subcontractors;
8. Post-Construction Storm Water Management;
9. Preparer;
10. Copy of the local permit;
11. BMP Consideration Checklist;
12. SWPPP Checklist;
13. Schedule of Values; and
14. Storm Water Pollution Prevention Drawings.

The Contractor shall amend the SWPPP, graphically and in narrative form, whenever there is a change in construction activities or operations which may affect the discharge of significant quantities of pollutants to surface waters, ground waters, municipal storm drain systems, or when deemed necessary by the Engineer. The SWPPP shall also be amended if it is in violation of any condition of the Permit or has not effectively achieved the objective of reducing pollutants in storm water discharges. Amendments shall show additional control measures or revised operations, including those in areas not shown in the initially accepted SWPPP, which are required on the project to control water pollution effectively. Amendments to the SWPPP shall be submitted for review and acceptance by the Engineer in the same manner specified for the initially accepted SWPPP. Accepted amendments shall be dated and logged in the SWPPP. Upon acceptance of the amendment, the Contractor shall implement the additional control measures or revised operations.

The Contractor shall keep a copy of the accepted SWPPP and accepted amendments at the project site. The SWPPP shall be made available upon request of a representative of the Regional Water Quality Control Board, State Water Resources Control Board, U.S. Environmental Protection Agency or local storm water management agency. Requests by the public shall be directed to the Engineer.

By June 15 of each year, the Contractor shall submit an annual certification to the Engineer stating compliance with the requirements governing the Permit. If the project is in non-compliance at any time, the Contractor shall make a written report to the Engineer within 15 days of identification of non-compliance.

Add the following section:
300-13-1.2 Availability of SWPPP Template. A site-specific draft document intended for use as a template for the required SWPPP document will be made available for use at the Contractor's option, at no cost to the Contractor. The document is available for review in Appendix B. The Contractor shall review the template and modify it as necessary to reflect the Contractor’s operations.

Add the following section:
300-13.1.3 Payment. Preparation, implementation and management of SWPPP shall be considered incidental to the items of work and no additional payment will be made therefore.

Add the following section:
300-13.1.4 SWPPP Implementation. Upon acceptance of the SWPPP, the Contractor shall be responsible throughout the duration of the project for installing, constructing, inspecting and maintaining the control measures included in the SWPPP and any amendments thereto and for removing and disposing of temporary control measures. Unless otherwise directed by the Engineer or specified in these supplemental provisions, the Contractor's responsibility for SWPPP implementation shall continue throughout any temporary suspension of work ordered in accordance with Section 6-3, "Suspension of Work". Requirements for installation, construction, inspection, maintenance, removal and disposal of control measures are specified in the “Handbook” and these supplemental provisions.

Soil stabilization practices and sediment control measures, including minimum requirements, shall be provided throughout the winter season, defined as between October 1 and April 30.

Implementation of soil stabilization practices and sediment control measures for soil-disturbed areas of the project site shall be completed, except as provided for below, no later than 20 days prior to the beginning of the winter season or upon start of applicable construction activities for projects which begin either during or within 20 days of the winter season.

The Contractor shall implement, year-round and throughout the duration of the project, control measures included in the SWPPP for sediment tracking, wind erosion, non-storm water management and waste management and disposal.

The Engineer may order the suspension of construction operations, at the Contractor’s cost, which create water pollution if the Contractor fails to conform to the requirements of this section as determined by the Engineer.

Add the following section:
300-13.1.5 Maintenance. To ensure the proper implementation and functioning of control measures, the Contractor shall regularly inspect and maintain the construction site for the control measures identified in the SWPPP. The Contractor shall identify corrective actions and time frames to address any damaged measures or reinitiate any measures that have been discontinued.

The construction site inspection checklist provided in the “Handbook” shall be used to ensure that the necessary measures are being properly implemented, and to ensure that the control measures are functioning adequately. The Contractor shall submit one copy of each site inspection record to the Engineer, within two days of the inspection.

During the winter season, inspections of the construction site shall be conducted by the Contractor to identify deficient measures, as follows:

1. When the five-day rain probability forecast exceeds forty percent (40%).
2. After any precipitation which causes runoff capable of carrying sediment from the construction site;
3. At 24 hour intervals during extended precipitation events; and
4. Routinely, at a minimum of once every week.

If the Contractor or the Engineer identifies a deficiency in the deployment or functioning of an identified control measure, the deficiency shall be corrected by the Contractor immediately, or by a later date and time if requested by the Contractor and accepted by the Engineer in writing, but not later than the onset of subsequent precipitation events. The correction of deficiencies shall be at no additional cost to the City.

SECTION 301 - TREATED SOIL, SUBGRADE PREPARATION AND PLACEMENT OF BASE MATERIALS

301-1 SUBGRADE PREPARATION.

301-1.2 Preparation of Subgrade. Modify the second and third paragraphs as follows: Change each instance reading “150mm (6 inches)” to “300 mm (12”)”.

301-1.3 Relative Compaction. Delete the first paragraph and substitute the following: The Contractor shall compact the upper 300 mm (12”) of subgrade beneath areas to be paved, have base or subbase material placed on them, or curb, gutter, curb and gutter, alley pavement, driveway or sidewalk constructed over them to no less than 95 percent maximum dry density as determined by ASTM test D-1557-91.

301-1.7 Payment. Modify the first paragraph as follows: Payment for subgrade preparation shall be included in the contract bid price for which the subgrade is prepared and shall include all labor, materials; including water, operations and equipment to scarify, adjust moisture, compact or re-compact the subgrade, both in cut areas and in fill areas, and no further compensation will be allowed.

SECTION 302 - ROADWAY SURFACING

Add the following: The Contractor shall be responsible for tree trimming along the curb line as noted in Section 300-1 Clearing and Grubbing – so as to provide a clear travel way during the construction of the roadway resurfacing.

The Contractor shall treat all vegetation within the limits of the paved area to be surfaced with a post emergent herbicide. Herbicide shall be applied at least 2 (two) working days prior to surfacing the street. Allowance for the two day period shall be shown in the schedule required per section 6-1.

Payment for pavement surfacing shall include tree trimming and post emergent herbicide treatment of the areas to be surfaced and no extra payment will be made therefore.

Public Convenience and Traffic Control. The Contractor shall schedule the work so as to prevent damage by all traffic. The Contractor shall not schedule work so as to conflict with trash pickup. The trash hauling schedule can be obtained by calling Coast Waste Management at (760) 929-9400. At least two weeks prior to work, Contractor shall send, by first class mail, notification letters to all property addresses within 500’ of the work. Obtaining the appropriate addresses shall be the contractor’s responsibility. Letters shall be as shown in bold type as follows, with the appropriate information specific to the work inserted at the locations indicated in the brackets and italicized.

(*Name of Contractor*)
(*Address of Contractor*)
(*Contractor's License Number*)

(*Date*)

As a part of the City of Carlsbad's ongoing program to maintain its streets, your street will be (insert type of resurfacing), beginning in two or three weeks. This process requires that your street be closed for (insert hours) starting at 7:00 a.m. and continuing until the Contractor removes the traffic control devices. You will be notified 72 hours in advance of the day your street will be closed by a brightly colored 3 ½" x 8 ½" card attached to your doorknob. You will also notice temporary no parking signs on your street with a specific no parking date written on it.

A successful street maintenance program depends on your cooperation. Please do not drive, walk, play, skate or allow pets on the street until it is opened by the Contractor. Furthermore, please do not wash your car or turn on any sprinklers while you are waiting. If you don't plan to leave your home before 7:00 a.m. on the day your street will be surfaced, and you need to use your vehicle later in the day, please park your car on an adjacent street in your neighborhood that is not signed as a no parking zone. When walking to and from your car, remember not to walk on the newly surfaced street or you may have black residue on the bottom of your shoes. The residue may damage some surfaces, may mark surfaces that you track it on, and may be very difficult to remove.

(*Name of Contractor*) is the Contractor that will be performing the resurfacing work for the City and you may call them at (*24 hour per day attended telephone number in the 760 area code*) for any questions you may have about the project. On the day your street is surfaced mail delivery may be delayed until the next day. You will not know the exact date your street will be closed until you receive the 3 ½" x 8 ½" card. If you have a moving company scheduled to come to your house within the next two weeks, please call and inform the Contractor of the date. If you have any concerns which are not addressed by the Contractor, please call the City's Engineering Inspection Department at 602-2780. They will assist you in resolving the concerns.

The City of Carlsbad has some of the finest streets in the county due to the concern and cooperation of citizens like you. Your cooperation is greatly appreciated."

During operations, the Contractor's schedule for resurfacing shall be designed to provide residents and business owners sufficient paved parking within an 800 foot distance from their homes or businesses.

Seventy-two hours prior to the start of any construction in the public right-of-way that affects vehicular traffic and/or parking or pedestrian routes, the Contractor shall give written notification of the impending disruption. For a full street closure, all residences and/or businesses on the affected street or alley shall be notified. For partial street closures, or curb, sidewalk and driveway repairs, the residences and/or businesses directly affected by the work shall be notified.

The Contractor shall deliver the notification which shall state the date and time the work will begin and its anticipated duration. The notification shall list two telephone numbers that may be called to obtain additional information. One number shall be the Contractor's permanent office or field office and the other number shall be a 24 hour number answered by a representative of the Contractor who is knowledgeable about the project. At least one of the phone numbers shall be in the (760) area code. An answering machine shall not be connected to either number. The notification shall also give a brief description of the work and simple instructions to the home or business owner on what they need to do to facilitate the construction. The Contractor shall submit the contents of the notification to the Engineer for approval. Notices shall not be distributed until approved by the Engineer.

For door hangers, the notification shall be pre-cut in a manner that enables it to be affixed to a doorknob without adhesives. It shall be a minimum size of 3-1/2 inches by 8-1/2 inches and shall be brightly colored with contrasting printing. The material shall be equivalent in strength and durability to 65 lb. card stock. The printing on the notice shall be no smaller than 12 point. The precut notices shall be as shown on the example provided in Appendix "A", with the day of the week circled and appropriate information specific to the work inserted at the locations indicated in the italicized font.

The preparation, materials, printing and distribution of the notifications shall be included in the contract price bid for Traffic Control and the Contractor will not be entitled to any additional compensation for printing and distributing these notices.

302-5 ASPHALT CONCRETE PAVEMENT.

Add the following:

302-5.2 Pavement Transitions. The Contractor shall ramp the approaches and termini to all structures and vertical joints in the cold-milled area which are transverse to through traffic with temporary asphalt concrete pavement as specified in section 306-1.5.1. Ramps shall be constructed the same day as cold milling and removed the same day as permanent paving. Ramp dimensions and compaction shall be as approved by the Engineer.

302-5.5 Distribution and Spreading. Modify as follows: After second sentence of sixth paragraph, add: The Contractor shall provide the spreading and finishing machine used to construct the asphalt concrete surface course with an automatic screed control for surface course paving. The automatic screed control shall be 9 m (30') minimum length. The paving machine shall be operated by an operator and two full-time screed men during all paving.

Delete the second sentence of paragraph 7 and the subsequent subsections A. thru E. which reference windrow operations. Add the following sentence in place of the deleted sentence and subsequent subsections: The use of windrow operations shall not be allowed.

302-5.6.1 General. Modify as follows: Second paragraph, Part (2), add: Pinched joint rolling procedures shall be required, and vibratory rollers shall be limited to breakdown, unless otherwise directed by the Engineer.

Modify as follows: After last paragraph, add: Unless directed otherwise by the Engineer, the initial breakdown rolling shall be followed by a pneumatic-tired roller as described in this section.

302-5.8 Manholes (and other structures). delete the first paragraph and replace with the following:
When placing the overlay the Contractor shall pave over appurtenances in the roadway which includes sanitary and storm access covers, water valve boxes, air vents, sewer dead end boxes and survey monument boxes. Each appurtenance shall be treated or covered to prevent adhesion of the overlay. Each appurtenance shall be located immediately after the overlay is placed and shall be thoroughly cleaned of any and all construction debris which may have entered due to the Contractor's operation. The contractor shall adjust all CMWD water valve boxes per CMWD Standard Drawing No. W11 or CMWD Standard Drawing No. W13. All City of Carlsbad sanitary sewer access covers shall be adjusted per CMWD Drawing No. S1. All storm sewer access covers shall be adjusted per SDRSD D-10. Riser rings or extensions shall not be used for the adjustment of these appurtenances.

Raising and adjusting to grade all appurtenances in the roadway shall be paid for at the contract unit price per each as shown in the Bid. Such price shall constitute full compensation for all labor, materials, and equipment necessary for completing the work as described in these specifications and plans.

302-5.9 Measurement and Payment. Add the following: Payment for asphalt concrete shall be at the unit price bid per ton. No additional payment shall be made for any tack coat or sand blotter.

Add the following section:
302-11 ASPHALT PAVEMENT REPAIRS AND REMEDIATION

Add the following section.
302-11.1 General. Asphalt pavement Repairs and Remediation shall consist of the repair and restoration of existing asphalt pavement. Repair of asphalt pavement shall consist of the saw cutting, removal and disposal of existing asphalt pavement in conformance with section 300-1.3, compaction of existing subgrade in conformance with section 301-1, grading and compaction of base material in conformance with section 301-2, application of grade SS-1h emulsified asphalt and the placement of asphalt concrete base and wearing courses as specified herein

Add the following section.
302-11.2 Full Depth Asphalt Concrete Patch. Full depth asphalt concrete patch shall consist of removing asphalt concrete and/or aggregate base/subgrade to 300 mm (1') below existing asphalt surface and placing replacing the material so removed with asphalt concrete. The area shown on the plans or set forth in the bid item are for estimating purposes only, final quantity will be as measured in the field. The Engineer will designate and mark the final limits of the asphalt patch area by outlining the area to be patched. The Contractor shall cut such areas to straight lines in square or rectangular areas as marked. The area so cut shall have two of the sides at right angles to the direction of traffic. The excavated faces of the base/subgrade shall be straight and vertical. The Contractor shall compact the upper 300mm (1') of subgrade to 95% relative compaction. A tack coat of SS-1h emulsified asphalt shall be applied uniformly to all asphalt to asphalt contact surfaces at a rate of 0.25 L/m^2 to 0.45 L/m^2 (0.05 to 0.10gallons per square yard) in accordance

with subsection 302-5.4, SSPWC. The Contractor shall fill and compact areas designated to be removed with 300 mm (1.0') full depth asphalt concrete. Asphalt concrete for full depth asphalt concrete patch shall be B-AR-4000. The asphalt concrete so constructed shall have a finish surface and density conforming to subsection 302-5.6.2 SSPWC.

Add the following section.
302-11.3 Crack Sealing. The Contractor shall wash, blow out and thoroughly dry all cracks designated to be sealed before installing hot poured rubber-asphalt joint sealant material. The sealant shall conform to the requirements of ASTM D1190. The Contractor shall dispose debris from crack cleaning outside the public way in accordance with Section 7-8.1, "Cleanup and Dust Control." The hot-melt rubberized asphalt shall be melted in a jacketed, double boiler type melting unit. Temperature of the heat transfer medium shall not exceed 245°C (475°F). Application of the hot-melt sealant shall be made with a pressure feed applicator or pour pot. Sealant shall be applied when the pavement surface temperature is greater than 4°C (40°F). Containers of hot-melt sealant shall be delivered to the job-site in unopened containers that are clearly marked with data showing the manufacturer's name, the product designation and the manufacturer's batch number and lot numbers. The level of the sealant shall be flush with the surface of the existing pavement. All excess sealant shall be removed from the crack with a minimum overlap onto adjacent pavement.

SECTION 303 CONCRETE AND MASONRY CONSTRUCTION

303-1 CONCRETE STRUCTURES

303-1.6.2 Falsework Design. Add the following: The Contractor shall provide all temporary bracing necessary to withstand all imposed loads during erection, construction, and removal of any falsework. The Contractor shall provide falsework drawings and calculations prepared by a registered professional engineer, civil or structural, that show provisions for resolution of all loads that may be imposed upon the falsework. Such plans and calculations shall include:

1. Resolution of all live, dead, wind, construction and impact loads that may be imposed on the falsework.
2. Temporary bracing or methods to be used during each phase of erection and removal of the falsework.
3. Concrete placement sequence.
4. Erection and removal sequence.
5. Deflection values for the falsework that include recommended methods to compensate for falsework deflections, vertical alignment, and anticipated falsework deflection.

Add the following section:
303-1.9.5 Surface Finish for Concrete Spillway. The Contractor shall provide a surface finish for concrete spillway to prevent the use of rollerblades, skateboards, and other rolling devices. Surface finish shall be a rough rake finish approved by the Engineer.

303-2 AIR-PLACED CONCRETE.

303-2.1.1 General. add the following: Modify Regional Standard Drawing D-75 as follows: replace stucco netting with 150mm x 150mm (6" x 6") by No. 10 by No. 10 welded wire mesh.

Add the following section:
303-5 CONCRETE CURBS, WALKS, GUTTERS, CROSS GUTTERS, ALLEY INTERSECTIONS, ACCESS RAMPS, AND DRIVEWAYS.

303-5.5.2 Curb. Add the following: The Contractor shall stamp the curb face with 75 mm (3”) high block letters directly above the point that it is crossed by underground facilities with the marking specified in Table 303-5.5.2(A)

TABLE 303-5.5.2(A)
Curb Face Markings

Type of underground facilities	Marking
Water Service Lateral	**W**
Sewer Service Lateral	**S**
Irrigation Water Lateral or Sleeve	**RW**

303-5.9 Measurement and Payment. Add the following: Curb and gutter, and curb, shall be considered as continuing across driveways and access ramps when constructed adjacent thereto. Neither curb and gutter nor curb will be paid for across the length of local depressions, except that which occurs in gutter transitions at each side of an inlet.

303-6 STAMPED CONCRETE.

303-6.1 General. Add the following: Concrete shall be 560-C-3250 with 6”x6” – 10 guage wire mesh throughout.

SECTION 304 - METAL FABRICATION AND CONSTRUCTION

304-3 CHAIN LINK FENCE.

304-3.2 Fence Construction. Add the following: Fence shall match height and make of existing chain link fence.

304-3.3 Installation of Gates. Add the following: Gates shall match height and make of existing.

304-3.2 Fence Construction. Add the following: Fence shall match existing or be an approved equal where necessary to restore.

304-3.3 Installation of Gates. Add the following: Gates shall match existing or be an approved equal where necessary to restore.

SECTION 306 - UNDERGROUND CONDUIT CONSTRUCTION

306-1 OPEN TRENCH OPERATIONS

Add the following section:
306-1.1.7 Steel Plate Bridging - With a Non-Skid Surface. This section covers the use of steel plate bridging. The Contractor shall not employ the use or use steel plate bridging or trench plate that does not meet the requirements of this section both in application and circumstance of use.

Add the following section:

306-1.1.7.1 Requirements for Use. Alternate construction methods that avoid the use of steel plate bridging shall be used by the Contractor unless otherwise approved by the Engineer. It is recognized that to accommodate excavation work, steel plate bridging may be necessary. All conditions for use of steel plate bridging set forth in the following requirements must be fulfilled as conditions of approval of the use of steel plate bridging. Consideration of steel plate bridging in the review process will take into account the following factors:

1. Traffic volume and composition.
2. Duration of use of the steel plate bridging.
3. Size of the proposed excavation.
4. Weather conditions.

The following formula shall be used to score the permitted use of steel plate bridging:

$$PS = \left[\frac{ADT + EWL}{1000} + DAYS + 10 \times WEEKEND + 5 \times NIGHTS + 20 \times WEATHER + \frac{SPEED\ (kmh)}{8} + SLOPE \times 100 \right] \times LANES$$

$$PS = \left[\frac{ADT + EWL}{1000} + DAYS + 10 \times WEEKEND + 5 \times NIGHTS + 20 \times WEATHER + \frac{SPEED\ (mph)}{5} + SLOPE \times 100 \right] \times LANES$$

where:

PS = plate score.

ADT = average daily traffic as defined in the Federal Highway Administration (FHWA) Manual on Uniform Traffic Control Devices (MUTCD) 2003 Edition as amended by the MUTCD 2003 California Supplement.

EWL = equivalent wheel loads as defined in the Federal Highway Administration (FHWA) Manual on Uniform Traffic Control Devices (MUTCD) 2003 Edition as amended by the MUTCD 2003 California Supplement.

DAYS = total number of 24 hour periods during which the plates will be utilized at the site being considered.

WEEKEND = total number of Saturdays, Sundays and holidays that the plates will be utilized at the site being considered.

NIGHTS = total number of overnight periods that the plates will be in place, exclusive of Saturday, Sunday and holiday nights.

WEATHER = total number of 24-hour periods that the plates will be utilized at the site being considered when the possibility of rain exceeds 40 percent.

SPEED = the design speed in kilometers per hour or miles per hour, as applicable in the formulae above, of the street where the plates are to be installed. This number shall not be reduced for construction zone speed reductions.

SLOPE = the quotient of the vertical differential divided by the horizontal distance. The vertical and horizontal dimensions shall be measured at the locations spanning a distance of 15 m (50') up and downstream of the position of the proposed steel plate bridging.

LANES = the number of lanes where plates will be used.

When the computed value of the plate score exceeds 50, steel plate bridging shall not be used unless, and at the sole discretion of the Engineer, the Engineer determines that no alternative method of construction is possible in lieu of using steel plate bridging or that other overriding considerations make the use of steel plate bridging acceptable. Alternatives considered to bridging shall include, but not be limited to, detouring traffic, construction detour routes, tunneling, boring and other methods of trenchless construction. Unless specifically noted in the provisions

of the Engineer's approval, the use of steel plate bridging at each location so approved shall not exceed four (4) consecutive working days in any given week.

Add the following section:
306-1.1.7.2 Additional Requirements. In all cases when the depth of the trench exceeds the width of the steel plate bridging resting on each side of the pavement adjacent to the trench, safety regulations require or the Engineer determines that shoring is necessary to protect the health or safety of workers or the public the Contractor shall install shoring conforming to Section 7-10.4.1 of the Standard Specifications. The trench shoring shall be designed and installed to support the steel plate bridging and traffic loads. All approvals for design, substitution of materials or methods shall be submitted by the Contractor in accordance with all provisions of section 2-5.3 Shop Drawings and Submittals. The Contractor shall backfill and resurface excavations in accordance with section 306-1.5.

Add the following section:
306-1.1.7.3 Installation. When backfilling operations of an excavation in the traveled way, whether transverse or longitudinal cannot be properly completed within a work day, steel plate bridging with a non-skid surface and shoring may be required to preserve unobstructed traffic flow. In such cases, the following conditions shall apply:

a) Steel plate bridging when the plate score exceeds 50 is not allowed except when, at the sole discretion of the Engineer, it is approved as specified hereinbefore.
b) Steel plates used for bridging must extend a minimum of 610 mm (2') beyond the edges of the trench.
c) Steel plate bridging shall be installed to operate with minimum noise.

When the use of steel plate bridging and shoring is approved by the Engineer, the Contractor shall install using either Method (1) or (2) depending on the design speed of the portion of street where the steel plate bridging is proposed for use.

The pavement shall be cold planed to a depth equal to the thickness of the plate and to a width and length equal to the dimensions of the plate. The cold milling shall produce a flat surface that the plate shall rest on with no horizontal or vertical movement. Horizontal gaps between the unmilled pavement and the plate shall not exceed 25 mm (1") and shall be filled with elastomeric sealant material which may, at the contractor's option, be mixed with no more that 50%, by volume, of Type I aggregate conforming to the requirements of tables 203-5.2(B) and 203-5.3(A).

Add the following section:
306-1.1.7.4 Materials. The minimal thickness of steel plate bridging shall be as shown in Table 306-1.1.7.4(A)

TABLE 306-1.1.7.4(A)
REQUIRED PLATE THICKNESS FOR A GIVEN TRENCH WIDTH

Maximum Trench Width (1)	Minimum Plate Thickness
0.3 m (10")	13 mm ($^1/_2$")
0.6 m (23")	19 mm ($^3/_4$")
0.8 m (31")	22 mm ($^7/_8$")
1.0 m (41")	25 mm (1")
1.6 m (63")	32 mm (1 ¼")

(1) For spans greater than 1.6 m (5'), a structural design shall be prepared by a registered civil engineer and submitted to the Engineer for review and approval in accordance with section 2-5.3.

Steel plate bridging shall be steel plate designed to support the HS20-44 truck loading per CALTRANS Bridge Design Specifications Manual. The Contractor shall maintain a non-skid surface on the steel plate with no less than a coefficient of friction of 0.35 as determined by California Test Method 342. If a different test method is used, the Contractor may utilize standard test plates with known coefficients of friction available from the CALTRANS District 11 Materials Engineer to correlate skid resistance results to California Test Method 342. In addition to all other required construction signing, the Contractor shall install Rough Road (W33) sign with black lettering on an orange background in advance of steel plate bridging.

Add the following section:
306-1.1.7.5 Measurement and Payment. Steel plate bridge materials including, but not limited to: steel plates, anchoring devices, cold milling, elastomeric sealant material, asphalt ramping and padding, signage, placing, installation, removal, relocation, preparation and processing of shop drawings and submittals to support the use of steel plate bridging and all other materials, labor, supervision, overhead of any type or description will be paid for as an incidental to the work that the bridging is installed to facilitate. No separate payment for steel plate bridging will be made. No extension to contract time will be allowed for, or because of, the use of steel plate bridging.

306-1.2.1 Bedding. All installation of, and bedding for recycled water, or potable water mains shall conform to Carlsbad Municipal Water District Rules and Regulations for the Construction of (Potable or Reclaimed) Water Mains, latest edition.

306-1.2.4 Field Jointing of Reinforced Concrete Pipe. Add the following: The Contractor shall provide Gasket-type joints for reinforced concrete pipe (watertight joints) where indicated on plans.

306-1.3.1 General. Add the following: The Contractor shall install detectable underground utility marking tape 230 mm x75 mm (9” x 3”) above each or, in the case of bundled underground conduit of the same type, the upper underground conduit being installed by the open trench method. The type and color of detectable underground utility marking tape shall conform to the requirements of section 207-25 et seq.

306-1.3.4 Compaction Requirements. delete Section 306-1.3.4 and replace with the following: The Contractor shall densify trench backfill to a minimum of 90 percent relative compaction except that in the top 300 mm (12”) of the street right-of-way, compaction shall be 95 percent.

306-1.5 Trench Resurfacing.

306-1.5.1 Temporary Resurfacing. Delete the fourth and fifth paragraphs and substitute the following: Temporary bituminous resurfacing materials which are placed by the Contractor are for its convenience and shall be at no cost to the Agency. Temporary bituminous resurfacing materials shall be used in lieu of permanent resurfacing only when approved by the Engineer. When temporary bituminous resurfacing materials are used in lieu of permanent resurfacing it shall be removed and replaced with permanent resurfacing within 7 days of placement. No additional payment will be made for temporary bituminous resurfacing materials. The price bid for the associated conduit or structure shall include full compensation for furnishing, placing, maintaining, removing, and disposing of such temporary resurfacing materials.

306-1.5.2 Permanent Resurfacing. Add the following: Except as provided in section 306-1.5.1, “Temporary Resurfacing,” the Contractor shall perform permanent trench resurfacing within 24 hours after the completion of backfill and densification of backfill and aggregate base materials.

306-1.6 Basis of Payment for Open Trench Installation. Add the following: Payment for utilities undergrounding which includes the utility trench for CATV and SDG&E and conduit for SDG&E's electric conversion shall be made on the basis of contract lump sum price for utilities undergrounding and no other payments will be made. Cox Cable will supply and deliver conduits and fittings to be installed by the Contractor. Cox Cable will install enclosures. The Contractor will furnish and install 6.4 mm (¼") nylon pull ropes in all conduit.

306-5 ABANDONMENT OF CONDUITS AND STRUCTURES. Add the following: Unless otherwise noted on plans, the Contractor shall remove all existing abandoned pipelines and conduits of any type, or use, and pipelines and conduits of any type, or use, that are abandoned during the course of the work and shall replace said pipelines and conduits with properly compacted soils. Payment for removal and disposal of abandoned utilities shall be included in the lump-sum bid for Clearing and Grubbing, and no additional payment will be made.

SECTION 310 - PAINTING

310-5 PAINTING VARIOUS SURFACES.

310-5.6 Painting Traffic Striping, Pavement Markings and Curb Markings. Modify the fifth paragraph as follows: The Contractor shall furnish all equipment, materials, labor, and supervision necessary for painting traffic lanes, directional arrows, guidelines, curbs, parking lines, crosswalks, and other designated markings in accordance with the Plans, or for approved temporary detours essential for safe control of traffic through and around the construction site. The Contractor shall remove by wet grinding all existing or temporary traffic markings and lines that may confuse the public. When temporary detour striping or markings are no longer required, they shall be removed prior to painting the new traffic stripes or markings.

310-5.6.3 Equipment. Delete the ninth paragraph and substitute the following: The Contractor shall provide a wet grinding machine with sufficient capacity to completely remove all existing or temporary traffic striping or markings that conflict with the striping plan, or are contrary to the Traffic Manual, or that may be confusing to the public. The surface produced by grinding the existing or temporary traffic striping or markings on pavement shall not exceed variations from a uniform plane more than 3 mm ($^1/_8$") in 3 m (10') when measured parallel to the centerline of the street or more than 6 mm ($^1/_4$") in 3 m (10') when measured perpendicular to the centerline of the street. The use of any equipment that leaves ridges, indentations or other objectionable marks in the pavement shall be discontinued, and equipment capable of providing acceptable surface shall be furnished by the Contractor. This equipment shall meet all requirements of the air pollution control district having jurisdiction.

310-5.6.6 Preparation of Existing Surfaces. Modify the first paragraph as follows: The Contractor shall remove all existing markings and striping, either permanent or temporary, which are to be abandoned, obliterated or that conflict with the plans by wet grinding methods. Removal of striping by high velocity water jet may be permitted when there is neither potential of the water and detritus from the high velocity water jetting to damage vehicles or private property nor to flow from the street into any storm drain or water course and when approved by the Engineer. The Contractor shall vacuum all water and detritus resulting from high velocity water jet striping removal from the pavement immediately after the water jetting and shall not allow such materials to flow in the gutter, enter the storm drain system or to leave the pavement surface. Surface variation limitations for high velocity water jet striping removal shall be the same as for grinding. The

Contractor shall not use dry or wet sandblasting in any areas. Alternate methods of paint removal require prior approval of the Engineer. Obliteration of traffic striping with black paint, light emulsion oil or any other masking method other than a minimum 30mm (0.10') thick asphalt concrete overlay is not permitted.

310-5.6.7 Layout, Alignment, and Spotting. Modify the first paragraph as follows: The Contractor shall establish the necessary control points for all required pavement striping and markings by surveying methods. No layout of traffic striping shall be performed by the Contractor before establishment of the necessary control points. The Contractor shall establish all traffic striping between these points by string line or other method to provide striping that will vary less than 80mm per 100m (1/2 inch in 50 feet) from the specified alignment. The Contractor shall obliterate, straight stripes deviating more than 80mm per 100mm (1/ 2 inch in 50 feet) by wet grinding, and then correcting the markings. The Contractor shall lay out (cat track) immediately behind installation of surface course asphalt and as the work progresses.

310-5.6.8 Application of Paint. Modify the second paragraph as follows: The Contractor shall apply the first coat of paint immediately upon approval of striping layout by the Engineer. The Contractor shall paint the ends of each median nose yellow.

Add the following to the eighth paragraph: The Contractor shall apply temporary traffic stripes in one coat. Temporary traffic stripes shall be maintained by the Contractor so that the stripes are clearly visible both day and night.

310-5.6.10 Measurement and Payment. Modify the first paragraph as follows: Final and temporary traffic striping, curb markings and pavement markings as shown on the plans and required by the specifications shall be included in the lump-sum price bid for temporary and final traffic striping, and no additional compensation will be allowed therefore. Reapplication of temporary stripes and markings shall be repainted at the Contractor's expense, and no additional compensation will be allowed therefore. The lump sum prices bid and shall include all labor, tools, equipment, materials, and incidentals for doing all work in installing the final and temporary traffic striping.

Add the following section:
310-7 PERMANENT SIGNING

Add the following section:
310-7.1 General. Add the following section: The Contractor shall provide and install all permanent traffic control signs at locations shown on plans and as specified herein.

Add the following section:
310-7.2 Measurement and Payment. Permanent signing and appurtenances thereto shown on the plans or required in the specifications are a part of the lump-sum item for permanent signing and payment therefore shall include full compensation for furnishing all labor, materials, tools, equipment, and incidentals and for doing all the work involved in supplying and installing permanent signing and appurtenances, complete in place, as shown on the plans, as specified in the Standard Specification and these special provisions, and as directed by the Engineer.

SECTION 312 - PAVEMENT MARKER PLACEMENT AND REMOVAL

312-1 PLACEMENT. Add the following to the third paragraph:

4) When being installed on asphalt concrete pavement sooner than 14 days after placement of the asphalt concrete pavement course on which the pavement markers are to be placed.

Add the following section:

312-1.1 Reflective Channelizer Placement and Removal. The Contractor shall place and remove reflective channelizers the same as for pavement marker placement and removal. The Contractor shall place the channelizers uniformly, straight on tangent alignment and on a true arc on curved alignment to the same tolerances of position as for application of paint in section 310-5.6.8. The Contractor shall perform all layout work necessary to place the channelizers to the proper alignment. If the channelizers are displaced or fail to remain in an upright position, from any cause, the channelizers shall immediately be replaced or restored to their original location, by the Contractor. When reflective channelizers are removed the pavement surface shall be restored to the same color and surface finish as the adjacent pavement.

SECTION 313 - TEMPORARY TRAFFIC CONTROL DEVICES

Add the following section:

313-1 TEMPORARY TRAFFIC PAVEMENT MARKERS.

Add the following section:

313-1.1 General. The Contractor shall supply and install temporary traffic pavement markers, channelizers, signing, railing (type K), crash cushions and appurtenances at the locations shown on the plans and as required in the specifications, complete in place prior to opening the traveled way served by said final and temporary traffic pavement markers, signing, railing (type K) and appurtenances to public traffic.

313-1.2 Temporary Pavement Markers. Temporary reflective raised pavement markers shall be placed in accordance with the manufacturer's instructions. Temporary reflective raised pavement markers shall be cemented to the surfacing with the adhesive recommended by the manufacturer, except epoxy adhesive shall not be used to place temporary reflective raised pavement markers in areas where removal of the markers will be required. Pavement striping, legends and markers which conflict with any traffic pattern shall be removed by grinding as determined by the Engineer. The Contractor shall use temporary reflective raised pavement markers for temporary pavement marking, except when the temporary pavement markers are used to replace patterns of temporary traffic stripe that will be in place for less than 30 days. Reflective pavement markers used in place of the removable-type pavement markers shall conform to the section 312 "Pavement Marker Placement and Removal", except the 14-day waiting period before placing the pavement markers on new asphalt concrete surfacing as specified in section 312-1 “Placement”, shall not apply; and epoxy adhesive shall not be used to place pavement markers in areas where removal of the markers will be required.

Add the following section**:**

313-1.3 Channelizers. Channelizers shall be new surface-mounted type and shall be furnished, placed, and maintained at the locations shown on the plans. Channelizer posts shall be orange in color. Channelizers shall have affixed white reflective sheeting as specified in the special

provisions. The reflective sheeting shall be 75 mm x 300 mm (3” x 12”) in size. The reflective sheeting shall be visible at 300 m (1000’) at night under illumination of legal high beam headlights, by persons with vision of or corrected to 20/20. The channelizer bases shall be cemented to the pavement in the same manner as provided for cementing pavement markers to pavement in section 312-1, “Placement.” Channelizers shall be applied only on a clean, dry surface. Channelizers shall be placed on the alignment and location shown on the plans and as directed by the Engineer. The channelizers shall be placed uniformly, straight on tangent alignment and on a true arc on curved alignment. All layout work necessary to place the channelizers to the proper alignment shall be performed by the Contractor. If the channelizers are displaced or fail to remain in an upright position, from any cause, the channelizers shall immediately be replaced or restored to their original location, by the Contractor. The Contractor shall provide the Engineer with a Certificate of Compliance in accordance with the provisions of section 4-1.5, "Certification”. Said certificate shall certify that the channelizers comply with the plans and specifications and conform to the prequalified design and material requirements approved by the Engineer and were manufactured in accordance with a quality control program approved by the Engineer.

Add the following section:
313-2 TEMPORARY TRAFFIC SIGNING.

Add the following section:
313-2.1 General. The Contractor shall provide and install all temporary traffic control signs, markers, markings, and delineators at locations shown on plans and specified herein.

Add the following section:
313-2.2 Maintenance of Temporary Traffic Signs. If temporary traffic signs are displaced or overturned, from any cause, during the progress of the work, the Contractor shall immediately replace the signs in their original approved locations. The Contractor shall maintain all temporary traffic signs used in the Work in a clean, reflective and readable condition. The Contractor shall replace or restore graffiti marked temporary traffic signs and posts used in the Work within 18 hours of such marking being discovered during non-working hours or, when the marking is discovered during working hours, within 2 hours of such discovery of marking.

Add the following section:
313-3 TEMPORARY RAILING (TYPE K) AND CRASH CUSHIONS.

Add the following section:
313-3.1 Temporary Railing and Crash Cushions. Temporary railing (Type K) shall consist of interconnected new or undamaged used precast concrete barrier units as shown on the plans. Temporary sand-filled crash cushions shall consist of new or undamaged used temporary sand-filled crash cushions units as shown on the plans.

313-3.1.1 Appearance. Exposed surfaces of new and used units of Temporary railing (Type K) shall be freshly coated with a white color paint prior to their first use on the project. The paint shall conform to the provisions in sections 210-1.5 “Paint Systems” and 310 “Painting”. Contractor shall be responsible for the removal and cleanup or painting over the graffiti from the K-Rails within 48 hours. The Contractor Shall replace or repaint units of Temporary railing (Type K) or shall remove graffiti, tire or vehicle marks, dirt or any and all materials such that said marks or discoloration mar the appearance of said units when ordered by the Engineer after the units are in place.

Add the following section.

313-3.1.2 Manufacture of Temporary Railing. In addition to the requirements herein the temporary railing (Type K) shall be manufactured per CALTRANS Standard Drawing T3. Concrete used to manufacture Temporary railing (Type K) shall conform to the provisions in sections 201-1, "Portland Cement Concrete" and 303-1 "Concrete Structures"." Load tickets and a Certificate of Compliance will not be required. Reinforcing steel shall conform to the provisions in sections 201-1, "Portland Cement Concrete" and 303-1 "Concrete Structures". Steel bars to receive bolts at ends of concrete panels shall conform to ASTM Designation: A 36/A 36M. The bolts shall conform to ASTM Designation: A 307. A round bar of the same diameter may be substituted for the end-connecting bolt shown on the plans. The bar shall conform to ASTM Designation: A 36/A 36M, shall have a minimum length of 660 mm and shall have a 75 mm (3") diameter by 9 mm ($^3/_8$") thick plate welded on the upper end with a 5-mm ($^3/_{16}$") fillet weld. The final surface finish of temporary railings (Type K) shall conform to the provisions in section 303-1.9.2 "Ordinary Surface Finish." Exposed surfaces of concrete elements shall be cured by the water method, the forms-in-place method, or the pigmented curing compound method. The pigmented curing compound shall be type 2 curing compound. Temporary railing (Type K) may have the Contractor's name or logo on each panel. The name or logo shall not be more than 100 mm in height and shall be located not more than 300 mm above the bottom of the rail panel.

Add the following section.

313-3.1.3 Installation of Temporary Railing. In addition to the requirements herein the temporary railing (Type K) shall be installed per CALTRANS Standard Drawing T3. Temporary railing (Type K) shall be set on firm, stable foundation. The foundation shall be graded to provide a uniform bearing throughout the entire length of the railing. Abutting ends of precast concrete units shall be placed and maintained in alignment without substantial offset to each other. The precast concrete units shall be positioned straight on tangent alignment and on a true arc on curved alignment Each rail unit placed within 3 m (10') of a traffic lane shall have a reflector installed on top of the rail as directed by the Engineer. Reflectors and adhesive will be furnished by the Contractor. A Type P marker panel conforming to the requirements of the Federal Highway Administration (FHWA) Manual on Uniform Traffic Control Devices (MUTCD) 2003 Edition as amended by the MUTCD 2003 California Supplement shall also be installed at each end of railing installed adjacent to a two-lane, two-way highway and at the end facing traffic of railing installed adjacent to a one-way roadbed. If the railing is placed on a skew, the marker shall be installed at the end of the skew nearest the traveled way. Type P marker panels shall conform to the provisions of section 206-7.2, "Temporary Traffic Signs". Where shown on the plans, threaded rods or dowels shall be bonded in holes drilled in existing concrete. When temporary railings (Type K) are removed, any area where temporary excavation or embankment was used to accommodate the temporary railing shall be restored to its previous condition or constructed to its planned condition.

Add the following section:

313-3.2 Temporary Sand-Filled Crash Cushions. Temporary sand-filled crash cushion units shall be "Energite III" manufactured by Energy Absorption Systems, "Fitch Inertial Barrier System Modules" manufactured by Roadway Safety Service, or equal. Features required to determine equivalence of any other temporary sand-filled crash cushion units shall be approval of the system by CALTRANS and that the temporary sand-filled crash cushion units meet NCHRP 350 standards. Other features will be suitability to application, operational characteristics, durability and other such characteristics that the Engineer shall determine. Temporary sand-filled crash cushions (TSFCC) shall be of the type and array configurations shown on plans, and installed at every end of, or gap in, the temporary railing (Type K) whenever the closest point of approach of traffic, regardless of direction, is 4.6 m (15') or less to the end of the temporary railing (Type K) being considered. The TSFCC shall be installed per CALTRANS Standard Drawings T1 and T2 for

approach speeds no less than the posted speed of the street prior to construction or 55 kilometers per hour (35 mph), whichever is the greater. The TSFCC array shall be appropriate to the application as shown on said standard drawings. A Type J and/or P marker panel conforming to the requirements of the Federal Highway Administration (FHWA) Manual on Uniform Traffic Control Devices (MUTCD) 2003 Edition as amended by the MUTCD 2003 California Supplement shall also be installed at each TSFCC array as shown in CALTRANS Standard Drawings T1 and T2. Particular care shall be taken to assure that crash cushions are installed with the soil supporting them and the adjacent soil leveled to match the elevation of the bottom of the temporary railing immediately adjacent to the crash cushion. All routes of approach to the TSCFF array shall be graded such that any vehicle diverging from the travelled way to strike the TSCFF will travel on a vertical alignment parallel to the segment of the travel lane that it departed from.

Add the following section:

313-4 MEASUREMENT AND PAYMENT. Temporary traffic pavement markers, temporary channelizers, temporary signing, temporary railing (type K), temporary crash cushions and temporary appurtenances thereto shown on the plans or required in the specifications are a part of the lump-sum item for traffic control and payment therefore shall include full compensation for furnishing all labor, materials, tools, equipment, and incidentals and for doing all the work involved in applying, installing, maintaining, and removing temporary traffic pavement markers, channelizers, signing, railing (type K), crash cushions and appurtenances, complete in place, as shown on the plans, as specified in the Standard Specification and these special provisions, and as directed by the Engineer. Payment for temporary crash cushions, concrete barriers and the signs and reflectors marking them shall include the installation, grading for installation, grading for the approach path, maintenance, painting and re-painting, replacement of damaged units and removal and shall also be included in the lump-sum price bid for traffic control. Payment for installation and/or relocation of K-rails and crash cushions when not shown on the plans and requested by the Engineer shall be made per section 3-3, Extra Work, SSPWC.

SUPPLEMENTAL PROVISIONS
TO

STANDARD SPECIFICATIONS FOR PUBLIC WORKS CONSTRUCTION

PART 6, MODIFIED ASPHALTS, PAVEMENTS AND PROCESSES

600-3 RUBBERIZED EMULSION - AGGREGATE SLURRY.

600-3.2 Materials add the following: Aggregate for Rubberized Emulsion - Aggregate Slurry shall be Type I Slurry Aggregate.

600-3.4 Application of REAS add to the first paragraphs: No slurry shall be applied until the provisions of subsection 212-1.2.6, Herbicide Application, Section 302-11 Asphalt Concrete Pavement Crack Filling and Sealing, Section 312-3 Pavement Marker Removal have all been satisfied.

The Contractor shall remove all existing markings, legends and striping, either permanent or temporary in those areas to be slurried. Removal of striping by high velocity water jet may be permitted when there is neither potential of the water and detritus from the high velocity water jetting to damage vehicles or private property nor to flow from the street into any storm drain or water course and when approved by the Engineer. The Contractor shall vacuum all water and detritus resulting from high velocity water jet striping removal from the pavement immediately after the water jetting and shall not allow such materials to flow in the gutter, enter the storm drain system or to leave the pavement surface. Surface variation limitations for high velocity water jet striping removal shall be the same as for grinding. The Contractor shall not use dry or wet sandblasting in any areas.

All cracks and areas between existing curb and gutter and edge of pavement that contain weeds or plant growth of any kind shall be treated with herbicides. Herbicides shall be applied at least 2(two) working days prior to sealing of street. Allowance for the two day period shall be shown in the schedule required per section 6-1. Contractor shall remove any visible plant growth prior to placement of Herbicide.

Full compensation for removal of striping and herbicide application shall include but not be limited to: furnishing all labor, tools, equipment, and materials necessary for doing the work and shall be considered as included in the contract unit price bid for Rubberized Emulsion Aggregate Slurry and no additional compensation will be allowed therefore.

600-3.6 Public Convenience and Traffic Control. Modify the first line with the following: Public Convenience and traffic control shall conform to 302-4.4.4. There shall be no stockpiling of material allowed on City right-of-way.

APPENDIX "A"

CITY OF CARLSBAD
ROAD WORK

ABC CONTRACTORS
OFFICE # (760)XXX-XXXX
FIELD # (760)XXX-XXXX

Dear resident:

As a part of the City of Carlsbad's ongoing program to maintain its streets, your street will be resurfaced with asphalt concrete over the existing roadway surface. This construction will require the closing of your street to through traffic for one day. Your street, from *XYZ St.* to *DEF Ave.* will be closed to through traffic and resurfaced on:

MON. TUE. WED. THU. FRI.
DATE: *XX / XX / XX*

from 7:00A.M. to 5:00 P.M.

If you don't plan to leave your home by 7:00 A.M. on the above date please park your car on an adjacent street in your neighborhood that will not be resurfaced. Streets scheduled for resurfacing can be determined by calling either the Contractor or the City of Carlsbad's Project Inspector. When walking to and from your car, remember not to walk on the newly overlaid street or you will have black residue on the bottom of your shoes. Please do not drive, walk on, walk pets, play, or skate on the newly overlaid asphalt. Also, please refrain from watering your lawns, washing cars, etc., approximately 6-8 hours after the asphalt is laid as running water will cause damage to the new surface.

ABC is the Contractor that will be performing the resurfacing work for the city and you may call them at the above phone number if you have any questions regarding the project. Resurfacing of your street will not occur on the day your trash is collected. Mail delivery may be delayed if the postman cannot reach the mailbox that day. If you have a moving company scheduled for that day please call and inform the Contractor of the date. If you have any concerns which cannot be addressed by the Contractor, you may call the City's Project Inspector @ (xxx) xxx-xxxx.

Thank you for your cooperation as we work to make a better City of Carlsbad.

APPENDIX "B"

Contractor Name
Jobsite Contact (name/mobile number)

SITE SPECIFIC WORK PLAN (SSWP)
(Site No. / Name)
(Date)

TASK	Description
Scope	Removal of pipe and valves, with reinstallation of new pipe and valves.
Location	Site 1: Intersection of Faraday and College
Workforce	1 – Project Superintendent 2 – Operators 6 – Laborers
Equipment	Traffic control, (2) backhoes, loader, track excavator, compactor, trailer and 3 crew trucks.
Materials	40LF of 10" PVC C900. (2) 10" gate valves. 40LF of 8" PVC C900. (1) 8" gate valve. (1) 10"x8" reducer. ¾" rock, plastic lining, (3) 2' submersible pumps, dissipater bags, chorine tablets. Plastic wrap, wax tape.
Staging	Material will be at the laydown yard a week prior to beginning the work and will be verified by the inspector. Material will be brought to the site at the beginning of the shift and removed at the completion of work.
Schedule	Tuesday, Jan. 7, 2020 at 9:00 pm to Wednesday, Jan. 8, 2020 at 5:00 am 9pm -10pm: Setup traffic control, remove traffic plates. 10pm-11pm: Cut pipe, drain water, begin removing pipe. 11pm-12am: Continue to remove all existing pipe. 12am-1am: Begin installing pipe and valves. 1am-3am: Finish installing pipe and valves. 3am-4am: Begin backfill. 4am-5am: Water service restored. 5am: Place recessed plates. All traffic control removed from roadway.
Prep Work Plan	Excavate the site three weeks prior to shutdown. Expose existing pipe. Take measurements. Safe off area and recess traffic plates.

TECHNICAL SPECIFICATIONS

Non-Standard Technical Specifications

Division Section	Section Name
Division 01	**General Requirements**
01150	Measurement and Payment
01390	Pre-Construction Survey
Division 02	**Site Work**
02060	Asbestos Abatement
02662	Asbestos Cement Pipe Testing
Division 15	**Mechanical**
15041	Disinfection of Piping

SECTION 01150

MEASUREMENT AND PAYMENT

PART 1 - GENERAL

1.01 SUMMARY

A. Unless otherwise specified, quantities of work shall be determined from measurements or dimensions in horizontal planes. However, linear quantities of pipe, piling, fencing and timber shall be considered as being the true length measured along longitudinal axis.

B. Unless otherwise provided in Specifications, volumetric quantities shall be the product of the mean area of vertical or horizontal sections and the intervening horizontal or vertical dimension. The planimeter shall be considered an instrument of precision adapted to measurement of all areas.

1.02 MEASUREMENT

A. Materials and items of work which are to be paid for on basis of measurement shall be measured in accordance with methods stipulated in the particular sections involved.

B. When payment is to be made on the basis of weight, the weighing shall be done on certified platform scales or, when approved by the Engineer, on a completely automated weighing and recording system. The Contractor shall furnish the Engineer with duplicate licensed weighmaster's certificates showing actual net weights. The Agency will accept the certificates as evidence of weights delivered.

C. The system of measure for this contract shall be the U.S. Standard Measures.

1.03 PAYMENT

A. The quantities listed in the Bid schedule will not govern final payment. Payment to the Contractor will be made only for actual quantities of Contract items constructed in accordance with the Plans and Specifications. Upon completion of construction, if the actual quantities show either an increase or decrease from the quantities given in the Bid schedule or on the drawings, the Contract Unit Prices will prevail subject to the provisions of Section 3-2.2.1.

B. The unit and lump sum prices to be paid shall be full compensation for the items of work and all appurtenant work, including furnishing all materials, labor, equipment, tools, and incidentals.

C. Payment will not be made for materials wasted or disposed of in a manner not called for under the Contract. This includes rejected material not unloaded from vehicles, material rejected after it has been placed, and material placed outside of the Plan lines. No compensation will be allowed for disposing of rejected or excess material.

D. Payment for work performed or materials furnished under an Assessment Act Contract will be made as provided in particular proceedings or legislative act under which such contract was awarded.

E. Whenever any portion of the Work is performed by the Agency at the Contractor's request, the cost thereof shall be charged against the Contractor, and may be deducted from any amount due or becoming due from the Agency.

F. Whenever immediate action is required to prevent injury, death, or property damage, and precautions which are the Contractor's responsibility have not been taken and are not reasonably expected to be taken, the Agency may, after reasonable attempt to notify the Contractor, cause such precautions to be taken and shall charge the cost thereof against the Contractor, or may deduct such cost from any amount due or becoming due from the Agency. Agency action or inaction under such circumstances shall not be construed as relieving the Contractor or its Surety from liability.

G. Payment shall not relieve the Contractor from its obligations under the Contract; nor shall such payment be construed to be acceptance of any of the Work. Payment shall not be construed as the transfer of ownership of any equipment or materials to the Agency. Responsibility of ownership shall remain with the Contractor who shall be obligated to store any fully or partially completed work or structure for which payment has been made; or replace any materials or equipment required to be provided under the Contract which may be damaged, lost, stolen or otherwise degraded in any way prior to acceptance of the Work, except as provided in Section 6-10.

H. Guarantee periods shall not be affected by any payment but shall commence on the date of recordation of the "Notice of Completion."

I. If, within the time fixed by law, a properly executed notice to stop payment is filed with the Agency, due to the Contractor's failure to pay for labor or materials used in the Work, all money due for such labor or materials will be withheld from payment to the Contractor in accordance with applicable laws.

J. At the expiration of 35 days from the date of acceptance of the Work by the Board, or as prescribed by law, the amount deducted from the final estimate and retained by the Agency will be paid to the Contractor except such amounts as are required by law to be withheld by properly executed and filed notices to stop payment, or as may be authorized by the Contract to be further retained.

1.04 PARTIAL AND FINAL PAYMENT

A. The Engineer will, after award of Contract, establish a closure date for the purpose of making monthly progress payments. The Contractor may request in writing that such monthly closure date be changed. The Engineer may approve such request when it is compatible with the Agency's payment procedure.

B. Each month, the Engineer will make an approximate measurement of the work performed to the closure date as basis for making monthly progress payments. The estimated value will be based on contract unit prices, completed change order work and as provided for in Section 9-2 of these General Provisions. Progress payments shall be made no later than thirty (30) calendar days after the closure date. Five (5) working days following the closure date, the Engineer shall complete the detailed progress pay estimate and submit it to the Contractor for the Contractor's information. Should the Contractor assert that additional payment is due, the Contractor shall within ten (10) days of receipt of the progress estimate, submit a supplemental payment request to the Engineer with adequate justification supporting the amount of supplemental payment request. Upon receipt of the supplemental payment request, the Engineer shall, as soon as practicable after receipt, determine whether the supplemental payment request is a proper payment request. If the Engineer determines that the supplemental payment request is not proper, then the request shall be returned to the Contractor as soon as practicable, but not later than seven (7) days after receipt. The returned request shall be accompanied by a document setting forth in writing the reasons why the supplemental payment request was not proper. In conformance with Public Contract Code Section 20104.50, the City shall make payments within thirty (30) days after receipt of an undisputed and properly submitted supplemental payment request from the Contractor. If payment of the undisputed supplemental payment request is not made within thirty (30) days after receipt by the

Engineer, then the City shall pay interest to the Contractor equivalent to the legal rate set forth in subdivision (a) of Section 685.010 of the Code of Civil Procedure.

C. From each progress estimate, 5 percent will be deducted and retained by the Agency, and the remainder less the amount of all previous payments will be paid.

D. No progress payment made to the Contractor or its sureties will constitute a waiver of the liquidated damages under 6-9.

E. As provided in Section 22300 of the California Public Contract Code, the Contractor may substitute securities for any monies withheld by the Agency to ensure performance under the Contract.

F. After final inspection, the Engineer will make a Final Payment Estimate and process a corresponding payment. This estimate will be in writing and shall be for the total amount owed the Contractor as determined by the Engineer and shall be itemized by the contract bid item and change order item with quantities and payment amounts and shall show all deductions made or to be made for prior payments and amounts to be deducted under provisions of the contract. All prior estimates and progress payments shall be subject to correction in the Final Payment Estimate.

G. The Contractor shall have 30 calendar days from receipt of the Final Payment Estimate to make written statement disputing any bid item or change order item quantity or payment amount. The Contractor shall provide all documentation at the time of submitting the statement supporting its position. Should the Contractor fail to submit the statement and supporting documentation within the time specified, the Contractor acknowledges that full and final payment has been made for all contract bid items and change order items.

H. If the Contractor submits a written statement with documentation in the aforementioned time, the Engineer will review the disputed item within 30 calendar days and make any appropriate adjustments on the Final Payment. Remaining disputed quantities or amounts not approved by the Engineer will be subject to resolution as specified in Section 3-5, Disputed Work.

I. When provided for in the Specifications, and subject to the limitation and conditions therein, the cost of materials and equipment delivered but not incorporated into the Work will be included in the progress estimate.

J. The written statement filed by the Contractor shall be in sufficient detail to enable the Engineer to ascertain the basis and amount of said disputed items. The Engineer will consider the merits of the Contractor's claims. It will be the responsibility of the Contractor to furnish within a reasonable time such further information and details as may be required by the Engineer to determine the facts or contentions involved in its claims. Failure to submit such information and details will be sufficient cause for denying payment for the disputed items.

1.05 PAYMENT FOR CLAIMS

A. Except for those final payment items disputed in the written statement required in Section 9-3.2 all claims of any dollar amount shall be submitted in a written statement by the Contractor no later than the date of receipt of the final payment estimate. Those final payment items disputed in the written statement required in Section 9-3.2 shall be submitted no later than 30 days after receipt of the Final Payment estimate. No claim will be considered that was not included in this written statement, nor will any claim be allowed for which written notice or protest is required under any provision of this contract including Sections 3-4 Changed Conditions, 3-5 Disputed Work, 6-6.3 Payment for Delays to Contractor, 6-6.4 Written Notice and Report, or 6-7.3 Contract Time Accounting, unless the Contractor has complied with notice or protest requirements.

B. The claims filed by the Contractor shall be in sufficient detail to enable the Engineer to ascertain the basis and amount of said claims. The Engineer will consider and determine the Contractor's claims and it will be the responsibility of the Contractor to furnish within a reasonable time such further information and details as may be required by the Engineer to determine the facts or contentions involved in its claims. Failure to submit such information and details will be sufficient cause for denying the claims.

C. Payment for claims shall be processed within 30 calendar days of their resolution for those claims approved by the Engineer. The Contractor shall proceed with informal dispute resolution under Section 3-5, Disputed Work, for those claims remaining in dispute.

1.06 BASE BID ITEMS

A. Items for which quantities are indicated "Lump Sum", "L.S.", or "Job", shall be paid for at the price indicated in the Bid. The contractor shall bid lump sum items with the understanding that the unit price bid items (Items 26 through 32) will be measured as each site, and lump sum amount shall be adjusted where the field verified unit quantity differs from the estimated quantity shown on the plans, as measured by the Engineer or city representative. The adjustment for unit price items shall be added or removed from that total lump sum price paid to the contractor at each applicable site. Such payment shall be full compensation for the items of work and all work appurtenant thereto.

B. When required by the Specifications or requested by the Engineer, the Contractor shall submit to the Engineer within 14 days after award of Contract, a detailed schedule of values in triplicate, to be used only as a basis for determining progress payments on a lump sum contract or designated lump sum bid item. This schedule of values shall equal the bid and shall be in such form and sufficiently detailed as to satisfy the Engineer that it correctly represents a reasonable apportionment of the items.

1.07 ALLOWANCE ITEM (BASE BID)

A. The allowance price for this item established in the Bid is an estimated figure to facilitate comparison of bids. Under allowance items, the Contractor shall construct modifications to existing utility and roadway systems illustrated by construction change directives/orders initiated by the Owner in writing.

B. For the purposes of allowance Bid Item, non-qualifying costs shall be defined as those costs incurred as a result of non-reimbursable expenses, delays caused by the Contractor, or the need for emergency repairs as caused by the Contractor's own actions, means and methods. Non-qualifying costs also include modifications initiated by the contractor to facilitate valve replacement and site restoration paid under other bid items, but are not necessary to accomplish the rehabilitation or replacement. Non-qualifying costs shall be paid by the Contractor and shall not be reimbursed by the Owner.

C. Compensation under this allowance price shall be determined in accordance with the General Conditions.

1.08 UNIT PRICE ITEMS (NOT INCLUDED IN BASE BID)

A. Unit prices shall be established to include compensation for all labor, materials and equipment required to furnish, install, construct, startup and test the work covered under that unit price item, whether listed in the related Compensation subsection for each item or not. All supervisions; overhead items including but not limited to bonds, insurance, and labor burden; and profit are also included.

B. Unit price items shall be measured at each site and the lump sum amount shall be adjusted where the field verified unit quantity differs from the estimated quantity shown on the plans, as measured by the Engineer or city representative. The adjustment for unit price items shall be added or removed from that total lump sum price paid to the contractor at each applicable site.

C. Payment shall fully compensate the Contractor for any other work which is not specified or shown, but which is necessary to complete the Work.

1.09 BASE BID ITEM DESCRIPTIONS (ITEM 1 THROUGH ITEM 26)

A. Item 1 through Item 20, Furnish all labor, materials, equipment, services and appurtenant work to complete site construction — Lump Sum.

1. Bid Items 1 through 20 consist of the following Bid Items:

   a. Item 1, Furnish all labor, materials, equipment, services and appurtenant work to complete the construction at Site 1

   b. Item 2, Furnish all labor, materials, equipment, services and appurtenant work to complete the construction at Site 2

   c. Item 3, Furnish all labor, materials, equipment, services and appurtenant work to complete the construction at Site 3

   d. Item 4, Furnish all labor, materials, equipment, services and appurtenant work to complete the construction at Site 4

   e. Item 5, Furnish all labor, materials, equipment, services and appurtenant work to complete the construction at Site 5

   f. Item 6, Furnish all labor, materials, equipment, services and appurtenant work to complete the construction at Site 6

   g. Item 7, Furnish all labor, materials, equipment, services and appurtenant work to complete the construction at Site 7

   h. Item 8, Furnish all labor, materials, equipment, services and appurtenant work to complete the construction at Site 8

   i. Item 9, Furnish all labor, materials, equipment, services and appurtenant work to complete the construction at Site 9

   j. Item 10, Furnish all labor, materials, equipment, services and appurtenant work to complete the construction at Site 10

   k. Item 11, Furnish all labor, materials, equipment, services and appurtenant work to complete the construction at Site 11

   l. Item 12, Furnish all labor, materials, equipment, services and appurtenant work to complete the construction at Site 12

   m. Item 13, Furnish all labor, materials, equipment, services and appurtenant work to complete the construction at Site 13

   n. Item 14, Furnish all labor, materials, equipment, services and appurtenant work to complete the construction at Site 14

   o. Item 15, Furnish all labor, materials, equipment, services and appurtenant work to complete the construction at Site 15

   p. Item 16, Furnish all labor, materials, equipment, services and appurtenant work to complete the construction at Site 16

q. Item 17, Furnish all labor, materials, equipment, services and appurtenant work to complete the construction at Site 17

r. Item 18, Furnish all labor, materials, equipment, services and appurtenant work to complete the construction at Site 18

s. Item 19, Furnish all labor, materials, equipment, services and appurtenant work to complete the construction at Site 19

t. Item 20, Furnish all labor, materials, equipment, services and appurtenant work to complete the construction at Site 20

2. The Measurement and Payment of Bid Items 1 through 20 shall be as described in the following paragraphs:

a. The lump sum price will constitute full compensation for all labor, materials, tools, and equipment necessary for the Contractor to furnish and install the following at each site as shown on the drawings: tree, plant and shrub clearing and grubbing; stripping and stockpiling; removal of existing valves, piping, manual air release valves, blow offs, thrust blocks and all other appurtenances within the removal extents shown on the contract drawings; removal, disposal, and abatement of asbestos cement pipe in accordance with the contract specifications; removal and disposal or transportation of all material, piping, valves, and appurtenances as shown on the drawings; design and install all temporary excavation support systems, including steel sheeting or other shoring materials; design and provide dewatering system in conformance with regulations; provide dust control measures; straw wattles/bales and all other erosion and sedimentation control devices; wetland and tree protection; traffic management devices; pre-construction photographs and/or video; excavation and backfill; material handling and stockpiling; disposal of surplus material; furnish and install all gate, manual air release valves, blow offs, and other proposed appurtenances as shown on the drawings; furnish and install polyethylene encasement around valves per city standards; furnish and install connecting piping, pipe fittings and joints to make a complete working installation; furnish and install bends, fittings, restrained joints, and thrust blocks; furnish and install all required transition couplings and restrained joints between the water main of same/different materials, classes, nominal diameters; conduct pressure, leakage, disinfection and bacteria sampling and testing upon the completed installation; furnish and place bedding material, filter fabric, sand base, backfill and compaction of trenches; coordinate work with utility companies, including payment of required utilities fees and protection of existing utilities; install and connect all utilities and appurtenances as required and as shown on the drawings; provide operation and maintenance manuals; provide and remove temporary site fencing; provide landscaping, including loam, seed, landscaping stone, shrubs and trees; repair and/or relocation of any utility lines broken and/or conflicting with construction; removal and replacement of curbs; removal and replacement of asphalt and concrete sidewalk and driveways; protection and support of existing utilities and structures; site paving; and provide all other items of work incidental to valve replacement work, complete as specified and not included for payment under other bid items.

b. Measurement for payment will be on the basis of percentage of work completed. No more than 90 percent of the payment shall be made until the List of Deficiencies generated at the Site Walk-Through for that specific site is resolved. Unit cost bid items (Items 26 through 32) shall be measured and credited to the owner or contractor where the final unit quantity installed is less or greater than the

estimated maximum quantity illustrated on the drawings. This credit will be withdrawn from the lump sum site payment total.

B. Item 21, Mobilization / Demobilization – Lump Sum (Not to exceed 5% of base bid)

1. The Contract lump-sum price paid for mobilization shall not exceed 5% of the base bid and includes full compensation for furnishing all insurance, bonds, licenses, labor, materials, utilities, tools, equipment and incidentals, and for doing all the work involved in mobilization and preparatory work and operations, including, but not limited to, those necessary for the movement of personnel, equipment, supplies, and incidental to preparing to conduct work on and off the project site and other offsite facilities necessary for work on the project; for all other facilities, sureties, work and operations which must be performed or costs incurred prior to beginning work on various Contract items on or off the project site, excepting those specifically paid for under separate sections of these specifications. The Contractor hereby agrees that the stipulated lump sum amount is sufficient for Mobilization, Demobilization and Compliance with the General Conditions, as described in this section, and that the Contractor shall have no right to additional compensation for Mobilization, Demobilization and Compliance with the General Conditions.

2. Progress payments for Mobilization, Demobilization and Compliance with the General conditions will be made as follows: For the first progress payment (after the issuance of the Notice to Proceed), forty percent (40%) of the amount bid for Mobilization and Preparatory Work will be allowed. For the second progress payment, an additional forty percent (40%) of the amount bid for mobilization and preparatory work will be allowed therefor. The final payment (20%) will be due upon completion of the project

C. Item 22, Record Drawings — Lump Sum

1. Measurement for payment for record drawings require that the Contractor provide and keep a complete and up-to-date red-lined set of record drawings, which shall be corrected in red daily and show every change from the original drawings and specifications and depict the exact "as-built" locations, sizes and kinds of equipment, underground piping, valves, and all other work not visible at surface grade. This set of drawings shall be kept on the job, shall be reviewed monthly as a condition of payment, and shall be used only as a record set. Contractor shall deliver the record drawings to the engineer on a monthly basis for interim review and then no later than at the final walkthrough meeting for final review per Section 2-5.3 Submittals. At the direction of the engineer, the contactor is conditioned to revise the record drawings to reflect field conditions and additional punch list items. Re-submittal of the record drawings shall be completed within 10 working days of the final walkthrough meeting date.

2. Payment for record drawings will be made by the unit measurement of lump sum (LS), which price named on the Bid Schedule under Item 21 shall constitute full compensation for completion of all such work as required per Contract Documents.

3. Measurement for payment will be on the basis of percentage of work completed.

D. Item 23, Unforeseen Site Conditions — Allowance

1. Measurement for payment for addressing unforeseen site conditions will be based upon all labor, materials, tools, incidentals and equipment, and for doing all the work involved to address unforeseen site conditions not shown on the plans and as required by the Owner.

2. Payment for addressing unforeseen site conditions will be made on a time and materials basis and not to exceed the stipulated dollar amount shown in the Bid Schedule under Item

22. The total dollar amount shown shall be used by all bidders and shall constitute full compensation for completion of all such work as required per Contract Documents.

E. Item 24, Asbestos Cement Pipe Testing – Per Each

1. The unit prices for Asbestos Cement Pipe Testing constitutes full compensation for all labor, materials, tools, and equipment necessary for the Contractor to provide asbestos cement pipe testing in accordance with the contract documents.

2. Payment for record drawings will be made by the unit measurement of per each (EA), which price named on the Bid Schedule under Item 21 shall constitute full compensation for completion of all such work as required per Contract Documents.

3. Measurement for payment will be on the basis of per each installed.

F. Item 25, Traffic Control Plans – Lump Sum

1. The lump sum price for Traffic Control plans constitutes full compensation for all labor, materials, tools, equipment, and coordination necessary for the Contractor to provide certified Traffic Control Plans required to complete construction for all project sites in accordance with WATCH and approved the District in accordance with the contract documents.

2. Payment for Traffic Control Plans will be made by the measurement of lump sum (LS), at the price named on the Bid Schedule under Item 25. The price shall constitute full compensation for completion of all such work as required per Contract Documents.

3. Measurement for payment will be on the basis of percentage of work completed.

G. Item 26, Tier II SWPPP – Lump Sum

1. The lump sum price for Tier II SWPPP includes full compensation for all labor, materials, tools, and coordination required for the Contractor to provide Tier II Level SWPPP for all project sites.

2. Payment for Tier II SWPPP will be made by the measurement of lump sum (LS), at the price named on the Bid Schedule under Item 26. The price shall constitute full compensation for completion of all such work as required per Contract Documents.

3. Measurement for payment will be on the basis of percentage of work completed.

1.10 UNIT PRICE BID ITEMS (NOT INCLUDED UNDER BASE BID)

A. Item 27, Asphalt Base Course – Per Ton

1. The unit prices for Asphalt Concrete Installation constitute full compensation for all labor, materials, tools, and equipment necessary for the Contractor to furnish and place asphalt concrete base course in accordance with city standards.

2. Measurement for payment of this Item shall be measured by the ton, as required to execute the construction per the design documents.

3. Payment of this Item shall be measured the ton as recorded on the delivery receipts, but shall not exceed the total tonnage as measured and confirmed by the owner's representative.

B. Item 28, Asphalt Paving – Per Ton

1. The unit prices for Asphalt Concrete Installation constitute full compensation for all labor, materials, tools, and equipment necessary for the Contractor to furnish and place asphalt concrete finish course in accordance with city standards.

2. Measurement for payment of this Item shall be measured by the ton, as required to execute the construction per the design documents. Contractor shall provide asphalt pavement extents widths per the District standard pavement restoration details. Excess asphalt used by the contractor, beyond the pavement limits provided by the standard details will be at no additional cost to the owner.

3. Payment of this Item shall be measured the ton as recorded on the delivery receipts, but shall not exceed the total tonnage as measured and confirmed by the owner's representative.

C. Item 29 through Item 34, PVC Pipe Installation — Per Linear Foot

1. Bid Items 29 through 34 consist of the following Bid Items:

   a. Item 29, 6-inch C900 PVC Pipe Installation

   b. Item 30, 8-inch C900 PVC Pipe Installation

   c. Item 31, 10-inch C900 PVC Pipe Installation

   d. Item 32, 12-inch C900 PVC Pipe Installation

   e. Item 33, 14-inch C900 PVC Pipe Installation

   f. Item 34, 16-inch C900 PVC Pipe Installation

2. The Measurement and Payment of Bid Items 29 through 35 shall be as described in the following paragraphs:

   a. The unit prices shall constitute full compensation for constructing PVC water mains and removal of all existing pipe. The unit prices shall include furnishing and installing PVC water mains, bends, and fittings at each vertical and horizontal change in direction. Provide all labor and materials required for design and install all temporary excavation support systems, including steel sheeting or other shoring materials; design and provide dewatering system in conformance with regulations; saw cutting the roadway for trenches; excavation and backfill of soils; material handling and stockpiling; removal and disposal of excess soil; select borrow, structural fill and/or fill; removal and disposal of unsuitable material as directed by the Engineer up to 6-inches below the outside of the pipe; furnish and place sand bedding; remove, handle, transport, and dispose of existing pipes, valves, and all other appurtenances as shown on the drawings; removal, disposal, and abatement of asbestos cement pipe in accordance with the contract specifications; furnish and install filter fabric; restore the trench surface to grade including, furnishing, backfilling, and compacting; compaction testing; furnish and place gravel sub-base on backfilled trenches under paved areas; grind, saw cut, and prepare existing paved surfaced in accordance with city paving standards; furnish and place asphalt concrete base course, asphalt concrete finish course in accordance with city standards; all other appurtenant materials and work incidental thereto and not specifically included for payment under other items.

   b. Measurement for payment will be by the linear foot of PVC main installed as measured by the Engineer along the horizontal projection to ground surface of the centerline of the completed water main. Unit price items shall be credited to the owner or contractor where the field verified unit quantity differs from the estimated

quantity shown on the plans, as measured by the Engineer or city representative. The credit for unit price items shall be added or removed from that total lump sum price paid to the contractor at each applicable site.

END OF SECTION

THIS PAGE LEFT INTENTIONALLY BLANK

SECTION 01390

PRE-CONSTRUCTION VIDEOGRAPHY

PART 1 - GENERAL

1.01 RELATED DOCUMENTS

A. Drawings and general provisions of the contract, including General and Supplementary Conditions and Division I Specification Sections, apply to the work of this Section.

B. Examine all Drawings and all other Sections of the Specifications for requirements therein affecting the work of this Section.

C. Coordinate work with that of all other trades affecting or affected by work of this Section. Cooperate with such trades to assure the steady progress of all work under the Contract.

1.02 SUMMARY

A. This section specifies the performance of pre-construction videography of the existing conditions to be conducted by the Contractor.

B. Pre-construction videography shall be completed for exterior areas of the adjacent structures, buildings and areas affected by the project work. Photography may be used to supplement the videography, but videography shall be the primary method of documented existing conditions.

1.03 PREFORMANCE REQUIREMENTS

A. The pre-construction videography shall document the existing conditions of the project area within the street right-of-way and abutting properties (as can be viewed from the right-of-way), and within the extent of temporary construction easements afforded to the Contractor for this project. The Contractor shall not be required to cross onto private property, or cross outside of temporary construction easements provided, for the purpose of documenting existing conditions.

B. The pre-construction videography shall include, but not be limited to, documenting the following existing conditions: Exterior of buildings and structures; driveways; trees, shrubs, bushes; landscaping and plantings; signage; mailboxes; sidewalks; granite and bituminous curbing; utility poles and overhead wiring; open water bodies; wetlands and streams.

C. The pre-construction videography shall be recorded and submitted at least two (2) weeks but no earlier than four (4) weeks before construction begins in the area.

D. The pre-construction videography may be phased over several sites/areas in connection with the Contractor's planned sequence of the work.

E. Detailed examination and video inspection of areas longitudinally along the pipe route and perpendicularly from the centerline of the pipe.

F. Documentation shall be in the form of a detailed video inspection the project area; and color digital photographs keyed to specific locations of the work by referencing stationing of the contract drawings and/or house numbers and streets.

1.04 SUBMITTALS

A. Shop Drawings: Submit the following in accordance with Section 01300 - SUBMITTALS.

1. Two (2) copies of the draft preconstruction report shall be submitted to the Engineer for review and acceptance prior to the start of construction. Each report shall include as a minimum the following:

   a. Results of visual inspection (on DVD) including video and photographic documents of project area; and

   b. Sketches as required to convey the location of the documentation.

2. The Engineer shall review the draft reports, and may indicate additional information that is required. This information shall be included in the final report.

3. Two (2) copies of the final report shall be submitted.

PART 2 - PRODUCTS (NOT USED)

PART 3 - EXECUTION (NOT USED)

END OF SECTION

SECTION 02060

ASBESTOS CEMENT PIPE REMOVAL AND DISPOSAL

GENERAL

1.1 SUMMARY

A. The work covered by this Section includes removal and disposal of non-friable asbestos-cement water pipes associated with the Carlsbad Municipal Water District Valve Replacement Phase II Project (the Project).

B. In addition to the scope and application of applicable Federal, State, and local regulations, this section includes a summary of the incidental procedures and equipment required to protect workers and nearby populations from exposure to airborne asbestos fibers. This document is not a comprehensive manual on the state-of-the-art practice for asbestos abatement procedures, equipment, or materials. The selected contractor represents, by acceptance of this work, that the Contractor is aware of the various state-of-the-art practice procedures, equipment, and materials acceptable by regulatory agencies that are also efficient, effective, and protective of human health and the environment.

C. Related Sections
   1. Section 02262 – Asbestos Cement Pipe Testing

1.2 EXTENT OF WORK

A. Water lines connecting to valves that will be replaced or relocated as part of the Project are known or anticipated to be asbestos-cement pipe (ACP). Sections of ACP connecting to valves will be removed between the valves and first ACP coupling and replaced with polyvinyl chloride (PVC) pipe. The verification of quantities of ACP to be removed will be the responsibility of the Contractor.

B. In addition to removal and disposal of ACP, sections of ACP that are removed will need to be sampled in accordance with Section 02262 – Asbestos Cement Pipe Testing

1.3 SUBMITTALS

A. Submit the following prior to commencing abatement work and maintain copies on site for the duration of the abatement project:
   1. Abatement work plan, including personal air sampling, clearance air testing, and schedule;
   2. Notification of Demolition or Asbestos Removal to San Diego County Air Pollution Control District (SDCAPCD), when applicable;
   3. Notifications of Intent to Conduct Asbestos Work to California Division of Occupational Safety and Health (Cal/OSHA);
   4. California Contractors License;
   5. Cal/OSHA Asbestos Contractor Certification;
   6. General Liability Insurance;
   7. Worker's Compensation Insurance;
   8. Site-Specific Health and Safety Plan (HASP);
   9. Negative exposure assessments (NEA), when applicable;

10. Asbestos Worker/Supervisor training accreditation;
11. Asbestos Worker's medical surveillance reports, including respirator medical evaluations;
12. Worker's respirator fit testing documentation;
13. Safety Data Sheets (SDS) for all supplies to be used on the job Site;
14. Air Sample Analytical Laboratory contact information and National Voluntary Laboratory Accreditation Program (NVLAP) credentials;
15. Written respiratory protection program;
16. Waste hauler information and certifications; and,
17. Waste disposal facility information and certifications.

B. Submit the following in a post-abatement submittal package:
   1. Worker exposure personal air sampling results conducted during the course of the project with fully executed chain of custody documentation;
   2. Daily sign-in forms;
   3. Daily progress logs; and,
   4. Copies of waste manifests with signatures of receipt from the waste disposal facility.

1.4 REGULATORY REQUIREMENTS

A. Except to the extent that more explicit or more stringent requirements are written directly into the contract documents, all applicable Federal, State, and local codes, regulations, and standards have the same force and effect (and are made a part of the contract documents) as if copied directly into the contract documents, or as if published copies are bound here within. Regulation references in the text are Federal regulations except where the State of California codes are listed in this section. Where the Federal and State regulations differ, the more stringent regulation shall be relevant to this Abatement Specification.

B. The Contractor shall assume full responsibility and liability for compliance with all applicable Federal, State, and local regulations pertaining to work practices, hauling, disposal, and protection of workers, visitors to the Site, and persons occupying areas adjacent to the Site. The Contractor is responsible for providing medical examinations and maintaining medical records of personnel as required by the applicable Federal, State, and local regulations. The Contractor shall hold the Agency and Agency's consultants harmless for failure to comply with any applicable work, hauling, disposal, safety, health, or other regulation on the part of the Contractor, the Contractor's employees, and the Contractor's subcontractors.

C. Federal Requirements:
   1. Occupational Safety and Health Administration (OSHA), including, but not limited to Code of Federal Regulations (CFR) – Occupational Exposure to Asbestos, Tremolite, Anthophyllite, and Actinolite Final Rules:
      a. 29 CFR 1910.1001 – General Industry Standard
      b. 29 CFR 1926.1101 – Construction Industry Standard
      c. 29 CFR 1910.134 – Respiratory Protection
      d. 29 CFR 1910.20 – Access to Employee Exposure and Medical Records
      e. 29 CFR 1910.1200 – Hazard Communication
      f. 29 CFR 1910.145 – Specifications for Accident Prevention, Signs and Tags

   2. United States Department of Transportation (DOT), including, but not limited to:
      a. 49 CFR 171 and 172 – Hazardous Substances

   3. United States Environmental Protection Agency (US EPA), including, but not limited to:

a. 40 CFR 763 Subpart E – Asbestos Abatement Projects, Worker Protection Rule
b. 40 CFR 763 Subpart E – Asbestos Hazard Emergency Response Act (AHERA) Regulation, Asbestos-Containing Materials in Schools Final Rule and Notice
c. 40 CFR 763 Subpart E, Appendix C – Training Requirements of AHERA Regulation, Asbestos-Containing Materials in Schools Final Rule and Notice
d. 40 CFR 61 Subpart A and Subpart M (Revised Subpart B)– National Emission Standards for Hazardous Air Pollutants (NESHAP), National Emission Standard for Asbestos
e. Public Law 101-637 – Asbestos School Hazard Abatement Reauthorization Act (ASHARA), enacted November 28, 1990

D. State Requirements
1. Cal/OSHA, including but not limited to:
a. Title 8 California Code of Regulations (CCR) 1529 – Construction Standard
b. Title 8 CCR 2303 – Injury and Illness Prevention Plan
c. Title 8 CCR 5144 – Respiratory Protection
d. Title 8 CCR 5194 – Hazard Communication
e. Title 8 CCR 5208 – General Industry Safety Orders, Asbestos Regulations
f. Title 8, Article 2.5 – Asbestos-Related Work Registration
g. Title 22, Division 4, Chapter 30 – Minimum Standards for Management of Hazardous and Extremely Hazardous Waste

2. California Department of Toxic Substances Control (DTSC) – Transport and Disposal Regulations

E. Local Requirements
1. Abide by all local requirements which govern asbestos abatement work or hauling and disposal of asbestos waste materials, including:
a. SDCAPCD Rule 1206 – Asbestos Removal, Renovation, and Demolition

1.5 DEFINITIONS

A. The following are terms and definitions applicable to the Section:

Abatement: Controls and procedures, which include encapsulation, enclosure and removal, but especially removal, used to lessen fiber release from ACM.

Accredited or Accreditation: (when referring to a person or laboratory): A person or laboratory accredited in accordance with Section 206 of Title II of the Toxic Substances Control Act (TSCA). Also refer to 40 CFR Part 763, Asbestos Model Accreditation Plan (Federal Register, Thurs., February 3, 1994) text dealing with training requirements and possession of valid accreditation.

Action Level-Asbestos: An airborne concentration of asbestos of 0.1 fibers per cubic centimeter (f/cc) of air calculated as an 8-hour time weighted average (TWA). Above this level, employers must initiate certain compliance activities such as employee training and medical surveillance. See also Permissible Exposure Limit (PEL) below.

Aerosol: A system consisting of particles, solid or liquid suspended in air.

Air Monitoring: The process of measuring the airborne asbestos fiber content of a specific volume of air in a stated period of time.

Airlock: A system for ingress or egress without permitting air movement between a contaminated area and an uncontaminated area, consisting of two curtained doorways at least 6 feet apart.

Amended Water: Water to which a surfactant has been added to decrease the surface tension to 35 dynes or less.

Area Air Monitoring: Air monitoring of asbestos fiber concentrations outside the regulated area.

Asbestos: The asbestiform varieties of serpentinite (chrysotile), riebeckite (crocidolite), cummingtonite-grunerite (commonly known as amosite), anthophyllite, and actinolite-tremolite. For purposes of establishing respiratory and worker protection both the asbestiform and non-asbestiform varieties of the above minerals and any of these materials that have been chemically treated and/or altered shall be considered as asbestos.

Asbestos-Containing Material (ACM): Any material containing more than 1% by area of asbestos of any type or mixture of types. OSHA defines "Asbestos Material" as any material containing at least 1% asbestos as determined by polarized light microscopy using the Interim Method of the Determination of Asbestos in Bulk Insulation Samples contained in Appendix A of Subpart F in 40 CFR Part 763. Cal/OSHA, however, has defined an ACM (referred to as asbestos-containing construction material or ACCM) more stringently as a building material containing more than 0.1% asbestos by weight.

Asbestos-Containing Waste Material (ACWM): Any material, which is or is suspected of being ACM, or any material contaminated with an asbestos, which is to be removed from a work area for disposal.

Asbestos Debris: Pieces of ACM that can be identified by color, texture, or composition. This also means dust, if the dust is established by an accredited consultant to be ACM. This also includes non-asbestos objects contaminated by damaged ACM prior to abatement and objects contaminated during abatement.

Asbestos Fibers: For this specification, asbestos fibers are those fibers having an aspect ratio (length to width) of 3:1 and 5 microns or longer (phase contrast microscopy [PCM] methodology). For Yamate Level II transmission electron microscopy (TEM) methodology a fiber refers to a structure as all fiber lengths and an aspect ratio of 5:1 or greater.

Authorized Visitor: The Agency, the Abatement Consultant, testing lab personnel, the Architect/Engineer, emergency personnel or a representative of any Federal, State, and local regulatory or other agency having authority over the project.

Barrier: Any surface that seals off the work area to inhibit the movement of fibers.

Breathing Zone: A hemisphere forward of the shoulders with a radius of approximately 6 to 9 inches.

Certified Industrial Hygienist (CIH): An industrial hygienist certified in Comprehensive Practice by the American Board of Industrial Hygiene or in specific aspects covering asbestos removal with experience in asbestos management.

Class I Asbestos Work: Activities involving the removal of thermal systems insulation (TSI) and surfacing ACM.

Class II Asbestos Work: Activities involving the removal of ACM, which is not TSI or surfacing material. This includes, but is not limited to, the removal of asbestos-containing wallboard, floor tile and sheeting, roofing and siding shingles, and construction mastics.

Class III Asbestos Work: Repair and maintenance operations where ACM, including TSI and surfacing ACM, may be disturbed.

Class IV Asbestos Work: Maintenance and custodial activities during which employees contact but do not disturb ACM and activities to clean up dust, waste, and debris resulting from Class I, II, and III activities.

Clean Room: An uncontaminated area or room, which is part of the worker decontamination enclosure system, with storage for workers street clothes and uncontaminated protective equipment.

Closely Resemble: The major workplace conditions, which have contributed to the levels of historic asbestos exposure, are no more protective than conditions of the current workplace.

Competent Person: One who is capable of identifying existing asbestos hazards in the workplace and selecting the appropriate control strategy for asbestos exposure, as defined by OSHA, and who has the authority to take prompt corrective measures to eliminate them (as specified in 29 CFR 1926.32 (F)). Additionally, for Class I and Class II work, one who is specially trained in a training course which meets the criteria of US EPA Model Accreditation Plan (40 CFR Part 763) for supervisor, or its equivalent and, for Class III and Class IV work, one who is trained in a manner consistent with US EPA requirements for training of local education agency maintenance and custodial staff set forth at 40 CFR 793l92 (a)(2).

Consultant: The Consultant is assigned to record and report on the progress of the asbestos abatement project. The Consultant, as the Agency's representative, is retained to conduct site visits, pre- and post-abatement visual surveys, and baseline, area, and clearance air monitoring.

Critical Barrier: One or more layers of 6-mil polyethylene (poly) sealed over all openings into a work area or any other similarly placed physical barrier sufficient to prevent airborne asbestos in a work area from migrating to an adjacent area.

Decontamination Area: An enclosed area adjacent and connected to the regulated area and consisting of an equipment room, shower area, and clean room, which is used for the decontamination of workers, materials, and equipment that are contaminated with asbestos.

Demolition: The wrecking or taking out of any building component, system, finish or assembly of a facility and any related razing, removing, or stripping of asbestos products.

Disposal Bag: A properly labeled 6-mil leak-tight poly bag used for transporting asbestos waste from the work area to the disposal site.

Disposal: Procedures necessary to transport and deposit the asbestos-contaminated material stripped and removed from the building, piping, and equipment in an approved waste disposal site in compliance with the US EPA regulations.

Equipment Room: A contaminated area or "dirty" room, which is part of the worker decontamination enclosure system, with storage for contaminated clothing and equipment.

Filter: A media component used in respirators to remove solid or liquid particles from the inspired air.

Friable Asbestos Containing Material: A building material that can be crumbled, pulverized, or reduced to powder by hand pressure when dry.

HEPA Filter Vacuum Collection Equipment (or vacuum cleaner): High efficiency particulate air filtered vacuum collection equipment with a filter system capable of collecting and retaining asbestos fibers. Filters should be of 99.97% efficiency for retaining fibers of 0.3 microns or larger. See P100 Filter Vacuum Collection Equipment (or vacuum cleaner).

HEPA Filter: A high efficiency particulate air filter capable of trapping and retaining 99.97% of mono-dispersed particles greater than 0.3 microns in diameter. See P100 Filter below.

Homogeneous Area: An area of surfacing material or TSI that is uniform in color and texture and appears to have been installed at the same time.

Most Contaminated Worker: The employee assigned the breathing zone air sample representing the highest daily exposure in each work area (8-hour TWA).

Negative Initial Exposure Assessment: A demonstration by the Contractor, which complies with the criteria in 29 CFR 1926-1101 (f)(2)(iii), that employee exposure during an operation is expected to be consistently below the PEL.

Negative Pressure Respirator: A respirator in which the air pressure inside the respiratory-inlet covering is positive during exhalation in relation to the air pressure of the outside atmosphere, and negative during inhalation in relation to the air pressure of the outside atmosphere.

Non-friable Asbestos Material: Where a binder is still encapsulating the asbestos fibers and the material is not friable.

Category I Non-friable ACM ("non-cementatious"): Asbestos-containing packing, gaskets, resilient floor coverings, and asphalt roofing products.

Category II Non-friable ACM ("cementatious"): ACM, excluding Category I non-friable ACM, that, when dry and in its present form, cannot be crumbled, pulverized, or reduced to powder by hand pressure. Examples include ACP, other asbestos cement products, plaster, stucco, paint and mastics.

Owner: Carlsbad Municipal Water District

P100 Filter Vacuum Collection Equipment (or vacuum cleaner): High efficiency particulate air filter (formerly known as a HEPA filter, currently known as a P100 filter) vacuum collection equipment with a filter system capable of collecting and retaining asbestos fibers. Filters should be of 99.97% efficiency for retaining fibers of 0.3 microns or larger.

P100 Filter: A high efficiency particulate air filter (formerly known as a HEPA filter, currently known as a P100 filter) capable of trapping and retaining 99.97% of mono-dispersed particles greater than 0.3 microns in diameter.

Permissible Exposure Limit (PEL)-Asbestos: The airborne concentration of asbestos (0.1 f/cc) at which the employer shall ensure that no employee is exposed. Where the PEL is exceeded the employer shall establish and implement a written program to reduce employee exposure to or below the limit by (1) engineering and work practice controls, and (2) use of required proper respiratory protection. No employee shall be exposed at any time to airborne concentrations of asbestos in excess of:

1.0 fibers/cc during any 30-minute period, which is the Excursion Limit.

Personal Monitoring: Air monitoring for asbestos fiber concentrations within the breathing zone (within 9 inches of the mouth) of an employee.

Protection Factor: The ratio of the ambient concentration of an airborne substance to the concentration of the substance inside the respirator at the breathing zone of the wearer. The protection factor is a measure of the degree of protection provided by a respirator to the wearer.

Regulated Area: An area established by the Contractor to demarcate areas where Class I, II, and III asbestos work is conducted, and any adjoining area where debris and waste from such asbestos work accumulate; and a work area within which airborne concentrations of asbestos exceed, or there is a reasonable possibility they may exceed, the PEL. Requirements for regulated areas are set out in 29 CFR 1926.1101 (e).

Removal: The taking out or stripping of ACM.

Repair: Returning damaged ACM to an undamaged condition or to an intact state so as to prevent fiber release.

Respirator: A device designed to protect the wearer from the inhalation of harmful atmospheres.

Surfactant: A chemical wetting agent added to water to improve penetration, thus reducing the quantity of water required for a given operation or area.

Time Weighted Average (TWA): One or more samples representing full shift exposure for an employee in each work area. Samples should be averaged over an 8-hour workday.

Visible Emissions: Any emissions containing particulate asbestos material that are visually detectable without the aid of instruments. This does not include condensed uncombined water vapor.

Wet Cleaning: The process of eliminating asbestos contamination from building surfaces and objects by using cloths, mops, or other cleaning utensils which have been dampened with amended water or diluted removal encapsulant and afterwards thoroughly decontaminated or disposed of as asbestos-contaminated waste.

Wetting Agents: Amended water (surfactant) is used for all asbestos removal and disposal activities. Airless sprayers are used to apply amended water during removal procedures. Elimination of asbestos from building or equipment surfaces is by wetted cloths, mops and other cleaning tools.

Work Area: The area where asbestos-related work is performed which is defined and/or isolated to prevent the spread of asbestos fibers and entry by unauthorized personnel. Work area is a Regulated Area as defined by 29 CFR 1926.

1.6 QUALITY ASSURANCE

A. Laboratory Qualification

1. The laboratory shall be regularly engaged in asbestos testing, and personnel used for monitoring airborne concentrations of asbestos fibers shall be proficient in this field. This proficiency shall be demonstrated by current acceptable participation in the Proficiency Analytical Testing (PAT) program and each analyst shall have completed the National Institute for Occupational Safety and Health (NIOSH) 582 Course (Sampling and Analysis for Asbestos) or the equivalent. The laboratory that performs PCM or TEM sample analysis must be accredited by National Voluntary Laboratory Accreditation Program (NVLAP).

B. Contractor and/or Contractor’s Certified Industrial Hygienist

1. The Contractor or Contractor's CIH is responsible for the following:
   a. Review of this Abatement Specification;
   b. Assign air monitoring personnel to sample Contractor’s employee exposures and an analytical laboratory that conforms to this Section;
   c. Maintain complete air sampling records, keep a daily activity log, and provide a report, which contains all personal air sampling results; and,
   d. Monitor air fiber concentrations inside and outside NPEs daily. Daily smoke-test the NPEs and visually check for leaks. Any holes or openings discovered in containment walls are to be immediately patched or repaired.
2. The Contractor shall provide to the Consultant, on a regular basis, observations regarding the integrity of all barriers constructed to protect outside environment from asbestos fiber release; decontamination facilities and protective coverings; work and safety plans; emergency evacuation procedures; and proper performance of measures used to protect the facility and employees, including: isolation, removal techniques, encapsulation, patching, disposal, and state-of-the-art procedures. The Consultant shall be informed immediately of operational problems or deviations from the Abatement Specification, initially by telephone and then in writing.
3. Violations: If, at any time the Contractor’s Competent Person (see definition in Part 1.5 of this Section) or CIH determines that practices are in violation of pertinent and applicable regulations or that air results exceed specified allowable levels, they will notify the Consultant supervising the project and the Owner’s Project Manager immediately. All work activity in the affected area(s) will cease until corrective actions have been taken. The Consultant and Project Manager shall notify the Owner.

4. Any cost resulting from such a stop work order issued by the CIH or Consultant will be borne by the Contractor and will not be considered as a basis for an increase in the contract amount.
5. The Contractor is responsible for the safety of all persons in or around the regulated area or within the areas the Contractor is using for ingress and egress.

1.7 ASBESTOS FIBER CONCENTRATION CONTROL LIMITS

A. Inside Enclosed Work Area
   1. Air concentrations of asbestos shall not exceed an 8-hour TWA of 0.1 f/cc of air by PCM for personnel selected as Most Contaminated Worker. Air concentrations of asbestos shall not exceed the 30-minute excursion level of 1.0 f/cc of air.

B. Outside Asbestos Work Area
   1. Air concentrations of asbestos fibers shall be maintained at an 8-hour TWA at or below 0.01 f/cc of air (by PCM). This applies to all areas outside the contained work areas while work is in progress, except for the asbestos Work Area.

C. Area Clearance Sampling
   1. Asbestos abatement clearance may be conducted by the Consultant and will include visual inspection only

1.8 TITLE OF WASTE MATERIAL

A. ACWMs resulting from abatement activities, except as specified otherwise, shall be the property of the Owner and shall be disposed of by the Contractor as required by applicable Federal, State and local regulations. Waste manifests will be signed by the Owner or Owner's Representative. Copies of all waste manifests are to be maintained by the Contractor as part of the required Post-Abatement ("close-out") documents. Contractor will submit the waste disposal site name, location, and US EPA identification number where asbestos wastes from the Site will be disposed. In addition, the Contractor will submit a letter from the disposal site certifying that the disposal site is legally authorized to receive ACM scheduled to be removed from the project Site.

1.9 PROTECTION OF EXISTING STRUCTURES

A. The contractor shall perform asbestos abatement work without damage or contamination of adjacent areas. Prior to any removal activity, all equipment remaining in work areas shall be covered with two layers of 6-mil fire-rated poly sheeting and sealed to preclude contamination during removal.

1.10 MEDICAL REQUIREMENTS

A. The Contractor shall provide workers with a comprehensive medical examination as required in 8 CCR 1529 (m). The Contractor shall submit one copy of most recent physical examination for each employee the Contractor will employ on the project. Physician's certificate must permit employee to work using a respirator and be dated within the last 12 months.

1.11 TRAINING

A. The Contractor will ensure and certify that all workers performing asbestos abatement activities shall have successfully completed training provided by a Cal/OSHA approved training provider within the past 12 months and have in their possession a valid Asbestos Worker Training Certificate or Contractor/Supervisor Certificate, issued by a Cal/OSHA-accredited trainer within the past 12 months. All certifications must be in compliance with the recent Model Accreditation Plan (MAP) provisions (8 CCR 1529 (k)(9)). Contractor will be required to submit a copy of each employee's training records prior to start of project and maintain a copy of all certifications on Site for the duration of the project.

1.12 PERMITS, LICENSES, NOTIFICATIONS, AND PATENTS

A. The Contractor will secure necessary permits and pay fees for asbestos removal, hauling, and disposal and provide timely notification of such actions as may be required by Federal, State, and local authorities. Copies of such notification shall be provided to the Owner prior to commencement and following completion of work (see pre-abatement and post-abatement submittal checklist in Part 1.3 of this Section). Post all notices required by applicable Federal, State, and local regulations at the job Site where asbestos abatement work will be performed. One copy of all notices shall also be kept on file in Contractor's office.

1.13 SAFETY COMPLIANCE

A. In addition to the requirements of this Abatement Specification, Contractor will comply with Agency's Site-Specific HASP and with laws, ordinances, rules, and regulations of Federal, State, and local authorities regarding handling, storing, transporting, and disposing of asbestos waste materials. Submit matters of interpretation of standards to the appropriate administrative agency for resolution before starting the work.

B. Emergency Evacuation: The Contractor shall develop and keep on Site an Emergency Evacuation Plan for each area of work or area in which the Contractor expects to use for ingress and egress. The Emergency Evacuation Plan shall be distributed and read by all personnel required to enter the work area. In addition, the Contractor shall post this plan at the entrance to the abatement areas.

C. Hazard Communications: Post warning signs and labels and ensure the employees are properly trained and outside contractors are properly notified. Contractor will conduct "tail-gate" health and safety meetings prior to work each shift to review the HASP and discuss new hazards, if applicable.

D. The Contractor will institute all necessary precautions so that no unauthorized personnel enter the regulated areas by mistake or design. When the work Site is unattended, the regulated area shall be secured so that unauthorized personnel cannot enter the area.

1.14 RESPIRATORY PROTECTION

A. The Contractor shall comply with the above regulations at a minimum and provide and ensure the proper use and selection of respirators, perform required respiratory fit tests and institute a respiratory program. The Contractor will be required to submit one copy of most recent fit test results for each employee who the Contractor will employ on the project. Evidence of successful fit test within the last year (from the start date of the project) must be provided for each employee.

PRODUCTS

1.15 RESPIRATORS

A. Respirators shall be used as specified in 8 CCR 1529 (h) and 8 CCR 5144. Initial selection of a respirator must follow regulations regarding a NEA for the work described in this Abatement Specification. The NEA data must be from workplace conditions that "closely resembles" the processes, types of material, control methods, work practices, and environmental conditions used and prevailing in the Contractors current operations. The NEA data must be from operations that were conducted by employees whose training and experience are no more extensive than that of employees performing the current job, and these data must show that under the conditions prevailing and which will prevail in the current workplace there is a high degree of certainty that employee exposures will not exceed the TWA and excursion limit (8 CCR 1529 (c)). The minimum level of respiratory protection for this project is a half-face negative pressure respirator with P100 HEPA cartridges.

1.16 POLYETHYLENE SHEETING

A. All poly sheeting must be fire retardant and shall be sized in lengths and widths to minimize the frequency of joints. Drop sheets used inside an NPE must be fire retardant material. The minimum thickness shall be as follows:
   1. Wall and floor barriers – 6-mil
   2. Ceiling barriers – 4 mil
   3. All others (critical barriers, etc.) – 6-mil

1.17 POLY BAGS

A. Poly bags shall be a minimum 6-mil thickness and transparent, printed with warning labels per DOT and US EPA regulations and 8 CCR 1529 (k)(8).

1.18 DISPOSABLE CONTAINERS

A. Waste containers shall be suitable to receive and retain any asbestos-containing or asbestos-contaminated materials until disposal at an approved site. Separate waste bins shall be utilized for hazardous and non-hazardous wastes. The containers shall be labeled in accordance with Federal, State and local regulations. Containers must be lockable, closed top bins, which are both airtight and watertight.

1.19 EYE PROTECTION

A. Full-face masks or goggles must be provided to personnel engaged in asbestos operations. Eye protection must be worn during abatement of any materials or operations that may present risk or damage to the eyes.

1.20 SPECIAL CLOTHING

A. Abatement workers must be provided with fire retardant disposable protective whole-body clothing, head coverings, gloves (including disposable poly or rubber gloves to protect hands,

when necessary) and foot coverings. Cloth gloves may be worn inside the poly or rubber gloves for comfort but shall not be used alone. Sleeves must be secure (at the wrists) and foot coverings secured (at the ankles) with duct tape. Patch all tears with duct tape as soon as discovered.

1.21 WARNING SIGNS

A. Warning signs should be printed and used, at a minimum, as described in 8 CCR 1529 (k)(7) and any local regulations (see example below).

DANGER
ASBESTOS
MAY CAUSE CANCER
CAUSES DAMAGE TO LUNGS
AUTHORIZED PERSONNEL ONLY
WEAR RESPIRATORY PROTECTION AND PROTECTIVE CLOTHING
IN THIS AREA

B. Warning signs shall be posted at all approaches to regulated Work Areas, and as required by Federal, State, and local regulations. Locate signs that are clearly visible from twenty (20) feet so that personnel may read the sign and take the necessary protective steps required before entering the area.

C. Postings shall be in English and Spanish, and in any language used by any of the Contractor's employees as the primary language of communication.

D. Provide labels and affix to all containers of ACWM, scrap, waste, debris, and other products contaminated with asbestos. All labels affixed to waste bags will be original adhesive labels. Photocopying of labels and affixing to waste bags will not be acceptable.

1.22 CAUTION LABELS

A. Provide labels of sufficient size to be clearly legible, displaying the following legend to be used on waste containers in accordance with 8 CCR 1529 (k)(8):

DANGER
CONTAINS ASBESTOS FIBERS
MAY CAUSE CANCER
CAUSES DAMAGE TO LUNGS
DO NOT BREATHE DUST
AVOID CREATING DUST

B. The DOT requires the following language on waste containers:

HAZARDOUS WASTE, SOLID N.O.S., ORM-E, NA 9188 (ASBESTOS)(RQ)

C. Additional labeling requirements are specified in 49 CFR 171 and 172.

1.23 OTHER MATERIALS, TOOLS, AND EQUIPMENT

A. The Contractor shall provide all other standard, commercial quality, materials such as lumber, nails, and hardware, which may be required to construct and dismantle the decontamination

area and the barriers that isolate the Work Area, and as required to complete the work as specified. It is the Contractor's responsibility to secure adequate sanitary facilities for persons associated with the abatement project at the Site. The Contractor shall provide and maintain an adequate number of portable toilets on Site for use by persons associated with the abatement project.

B. Additional materials, tools and equipment that may be used on the Site include the following:
   1. Water Sprayer: For amended water application, the water sprayer shall be an airless or other low-pressure type.
   2. Airless Sprayer: An airless sprayer suitable for application of encapsulating material shall be used during the project.
   3. Vacuum Equipment: All vacuum equipment utilized in area Work Area shall use HEPA filters on the discharge and shall be suitable for wet/dry usage.
   4. Transportation Equipment: Transportation equipment, as required, shall be suitable for loading, temporary storage, transit, and unloading of contaminated waste without exposure to persons or property.
   5. Other Tools and Equipment: The Contractor shall provide other suitable tools for the removal, enclosure, encapsulation, patching, and disposal activities, including but not limited to hand-held scrapers, brushes, sponges, and rounded-edge shovels.
   6. Electrical: Electrical tools and equipment shall meet all applicable codes and regulations. Ground fault protection or assured grounding programs, as required by OSHA, shall be in effect at all times. The Contractor shall take all additional precautions and measures to ensure a safe working environment during wet removal. This includes shutting off all live electrical lines in the work area, as verified by a certified electrician, and using lockout/tagout procedures as necessary. It will be the responsibility of the abatement Contractor to secure adequate electric power available prior to commencing abatement activities. As such, it will be the responsibility of the Contractor to provide electric generators during abatement activities, if needed.

EXECUTION

1.24 WORK PROCEDURE

A. Perform asbestos related work in accordance with 8 CCR 1529 and as specified herein. Use only wet removal procedures unless they create an unsafe working condition. Properly notified and trained personnel shall wear and utilize protective clothing and equipment. Eating, smoking, or drinking shall not be permitted in the regulated area or the Site building. Personnel of other trades not engaged in the abatement of asbestos shall be notified of the presence of asbestos in accordance with 8 CCR 1529 (k). Radios are not allowed within the Site buildings, other than two-way radios for communication purposes. Cellular phones are not allowed within regulated work areas. Verify mechanical, electrical, and building items affecting the Work of this Section are placed and ready to receive this Work.

B. Contractor will be responsible for scheduling work with Owner and confirming that water system has been shut down or otherwise isolated prior to starting work. Contractor shall be responsible for knowing how and where emergency shut off valves for water, gas, and electrical utilities are located.

C. At this time it is not known if sources for water or electrical power will be available to the Contractor during abatement activities. It will be the Contractor’s responsibility to provide the

necessary water supply and electrical power during each phase of asbestos removal for the project if not supplied at the Site.

1.25 REGULATED AREA – OPEN

A. In no event shall the use of an open regulated area conflict with applicable Federal, State, or local regulations, unless a waiver of the specific activity proposed is provided by the appropriate regulatory agency. Establish designated limits for the asbestos work area and barricade the designated area from non-asbestos workers with the use of rope, caution tape or other continuous barriers. Maintain all other requirements associated with removal and disposal of asbestos as applicable. Also, where an enclosure is not provided, area monitoring of airborne asbestos fibers will be taken during the work shift at the designated limits of the asbestos work area, and at such frequency as specified herein.

B. If the quantity of airborne asbestos fibers monitored at the designated limits at any time reaches the maximum TWA of 0.01 f/cc, stop work immediately. Notify key personnel and proceed with clean-up activities. If adjacent areas are contaminated, clean the contaminated areas and monitor and visually inspect the area as specified herein.

1.26 DECONTAMINATION

A. Decontamination procedures shall not include HEPA-filtered vacuuming of workers in lieu of a shower room. HEPA-filtered vacuuming and double suiting is allowed if a remote shower facility must be utilized. All workers shall remove protective clothing and wash all exposed parts of their person before leaving the area. Washbasins or buckets shall be provided with towels to clean respirators daily. The Contractor shall ensure that the workers take proper care of their assigned respirators and safety equipment.

B. Provide a decontamination room to provide a storage area for workers clothes that are used in the work area. A separate air-lock room can be constructed for larger equipment and waste bags; however, use of this room still requires proper decontamination procedures. Personnel ingress and/or egress from the work area through the equipment air-lock room will be prohibited.

C. The two-stage decontamination chamber shall be constructed for all regulated areas established for this project. The decontamination systems shall consist of a clean changing area (outermost chamber) and dirty equipment storage area (innermost chamber). Double layers of plastic sheeting (fire retardant) shall be taped/spray-glued securely in place. Plastic sheeting (minimum 6-mil each layer) shall be used throughout.

D. Construction of decontamination chambers shall conform to requirements of 29 CFR 1926.58, AHERA, and Title 8 CCR Section 1529, Cal/OSHA Asbestos Standard.

E. Individual clean towels shall be provided for employees and representatives of the Owner who visit the Site. Disposable towels are acceptable and recommended.

F. A remote decontamination unit may be used for workers involved in glove bag or mini-enclosure operations. Remote units must be placed within the regulated area where unauthorized personnel will not cross the path from the work area to the remote unit.

1.27 ACCESS TO WORK AREA

A. Access to Isolated Work Areas by Others
   1. Except for emergency and the Contractor's authorized personnel, the Contractor shall limit access to the Work Area to authorized representatives of the Owner. At no time shall any personnel enter a work area without notifying the on-Site Competent Person first and signing the Site entry log.

B. Visitor Communications
   1. All inquiries concerning the work Site, asbestos abatement project and other job activities shall be directed to the on-Site Competent Person. The Contractor shall notify the Project Manager of visitors (i.e. regulatory inspectors, OSHA personnel, law enforcement, personnel, press, etc.) that visit the Site during the project. If the Contractor is cited by a regulatory agency, the Contractor shall immediately notify the Project Manager.

C. Audio-Visual Surveillance
   1. The contractor shall provide an observation window (in accordance with applicable regulations) for enclosures so that the supervisor can monitor work activity. In areas where visual access is not possible, headsets or walkie-talkies for audio communications may be required.

1.28 AIR MONITORING

A. Monitoring of airborne concentrations of asbestos fibers shall be in accordance with the specified regulations, Part 1.7 of this Section, and as specified hereafter.

B. An initial exposure assessment shall be performed for each area unless previously sampled or in areas shown not to present concentrations exceeding the PELs under the given work conditions.

C. Area air monitoring may be conducted by the Consultant based on observations of abatement work practices. For this project, area air samples will be analyzed by phase contrast microscopy (PCM), NIOSH Method 7400, and airborne fiber concentrations are required to be below the US EPA Clearance Criteria for PCM (0.01 f/cc).

1.29 RECORDS

A. Documentation shall be kept for each filter sample procured, including worker sampled, respiratory protection equipment used, work area location, date and time taken, volume of air drawn through filter, pump identification number and calibration. Documentation shall indicate whether tests were taken in isolated work areas, in glove bag work areas, in occupied public spaces, etc., and shall be part of the permanent record provided at project completion.

1.30 AIR SAMPLES

A. The following refers to the different types of air samples:
   1. Area Air Sampling: Area air samples shall be collected by the Consultant to evaluate the integrity of the containment structure. The sampling protocol shall conform to the NIOSH 582 standards and 40 CFR Part 763.
   2. Personal Air Samples: The Contractor is responsible for monitoring its employees' exposure and maintaining the proper records (8 CCR 1529 (f) and (n)).

B. Results of all area air monitoring shall be made available to the Consultant within 48 hours of sampling. Results of all personal air monitoring shall be made available to the Consultant within one week of the completion of the project, unless the PELs are exceeded, in which case results should be made immediately available to the Consultant.

C. If the results of PCM analysis exceed the established limits, the Contractor will be required to initiate additional air and surface cleaning procedures to reduce fiber concentration below these limits. The Contractor may resume abatement work in that area only after authorization from the Consultant is received. Any costs resulting from air sampling results above the regulatory criteria shall be borne by the Contractor and will not be a basis for an increase in the contract amount.

1.31 ASBESTOS HANDLING PROCEDURES DURING REMOVAL

A. Sufficiently wet asbestos material with a fine spray of amended water during removal, cutting, or other handling to reduce the emission of airborne fibers. Remove section of ACP from valve connection to first coupling back from the valve connection. ACP should be removed in whole sections; cutting of ACP is prohibited. Work practices that create dust or otherwise release airborne asbestos fibers shall be avoided. Each section of ACP that is removed shall be wrapped in two layers of 6-mil poly prior to disposal. Any ACP debris remaining in trenches should be removed by hand and placed into waste bags for appropriate disposal.

B. All moveable objects located inside a Work Area must be HEPA vacuumed and wet wiped prior to scheduled removal and prior to abatement cleaning. All immovable objects inside a work area must be pre-cleaned by HEPA vacuum and wet wiping. Fixed equipment that may be damaged by wet wiping shall be HEPA vacuumed only.

1.32 DISPOSAL

A. The Contractor shall determine current waste handling, transportation, and disposal regulations for the work Site and for each waste disposal landfill. The Contractor must comply fully with these regulations and all DOT and US EPA requirements.

B. Material shall be delivered directly to the pre-designated disposal site within five days for burial.

C. All labels and signs shall be in accordance with US EPA, OSHA, and DOT regulations as described in Parts 2.7 and 2.8 of this Section.

D. The Contractor shall fill out manifest forms for the Owner's (Generator's) signature. Original disposal receipts, manifests, and bill of lading forms must be turned in at project completion to the Owner and Consultant.

E. Sealed waste containers may be stored within the work area until a sufficient volume of waste has accumulated for disposal, but not to exceed five days. This storage area will be prominently designated and waste containers will be covered with poly sheeting. Waste should be stored out of sight of the public in a secure area.

F. Decontaminated containers shall be removed from Site staging area and work Site at the end of each workday. Workers unloading the sealed bags and machinery operators shall wear respirators when handling material at the disposal site and shall be a State-certified asbestos worker.

G. Non-friable materials may be disposed as non-hazardous construction waste at a disposal site permitted to receive the waste. The Contractor shall notify the receiving non-hazardous waste landfill of the type and nature of the asbestos debris to be disposed.

END OF SECTION

THIS PAGE IS INTENTIONALLY BLANK

SECTION 02262

ASBESTOS CEMENT PIPE TESTING

PART 1 - GENERAL

1.01 SECTION INCLUDES

A. Cutting and handling of Asbestos Cement pipe (ACP). Examine all other portions of the contract documents for requirements therein affecting the work of this Section.

B. Laboratory Energy Dispersive Spectroscopy (EDS) testing of ACP samples.

1.02 REFERENCES

A. Abbreviations

1. ACP Asbestos Cement Pipe
2. EDS: Energy Dispersive Spectroscopy

1.03 COORDINATION

A. Prior to work, schedule ACP cutting and repair with the Owner to allow pipeline to be shut down prior to removal of full circumference sample. Cutting and removal of ACP without previous authorization from the Owner is prohibited.

B. Cut and remove ACP in accordance with Federal, Cal/OSHA, and local regulations.

1.04 QUALIFICATIONS

A. Personnel responsible for cutting and handling the ACP:

1. Trained and experienced in the means and methods of cutting ACP per the requirements of California OSHA.
2. Performed successful cutting and handling of ACP three (3) times in the last five (5) years.

B. Laboratory responsible for EDS testing:

1. Experienced in performing EDS testing on ACP for a minimum of five (5) projects in the last five (5) years.

C. Personnel responsible EDS testing

2. Trained and experienced in operating scanning electron microscopy and energy dispersive spectroscopy equipment for a minimum of five (5) years, having worked with the equipment used for this project for a minimum of one (1) year.

1.05 SUBMITTALS

A. Furnish submittals in accordance with the General Provisions.

B. Submit the following products, procedures, and experience specific to testing and handling of ACP within 30 calendar days of the Contractor's Notice to Proceed:

1. Work experience of personnel responsible for cutting and handling of the ACP including:
   a. Date and Location of work performed.
   b. Name and phone number of contacts with Agency, Owner, or Owner's representative for whom the work was performed.
   c. Size of pipe and tools used.
2. Safety equipment and measures, including personnel safety gear, temporary enclosures, warning signs, fences, etc. to be used at the site.
3. Packaging and Bagging materials to be used for safe storage and transportation of ACP samples.
4. Work experience of the laboratory in responsible charge of performing EDS testing:
   a. Description of work performed and date.
   b. Name and phone number of contacts with Agency, Owner, or Owner's representative for whom the work was performed.
5. Documentation verifying calibration of EDS testing equipment and devices to be used for this project.
6. Work experience of personnel responsible for administering EDS testing on ACP:
   a. Date, Laboratory name, and location of work performed.
   b. Name and phone number of contacts with Agency, Owner, or Owner's representative for whom the work was performed.
7. EDS scanning electron microscope to be used by laboratory for EDS testing.
8. Laboratory ACP Testing work plan.

PART 2 - PRODUCTS

2.01 PACKING AND BAGGING MATERIALS

A. Asbestos Disposal Bags

1. Transparent 6 mil minimum thick plastic.
2. Clearly labeled Asbestos warning.
3. Can be sealed to permit safe storage after testing has been performed.

PART 3 - EXECUTION

3.01 SAFTEY MEASURES

A. Perform all work in accordance with the local building codes, Federal Industrial Safety Orders, Asbestos NESHAP requirements, and requirements of Cal/OSHA. Personnel working on or in direct vicinity of cutting and handling ACP must wear protective outerwear, eyewear, and respirators per Cal/OSHA.

B. Provide safeguards to public and personnel safety including warning signs, fences, lights, and/or other similar items that are necessary for the protection of all personnel during the cutting and handling activities of ACP.

C. Assemble and use temporary enclosures to contain friable asbestos fibers and prevent them from release to the atmosphere during cutting. Wet the ACP during cutting to prevent generation of friable asbestos fibers.

D. The Contractor shall assume full responsibility for personnel and site safety.

3.02 PROTECTION OF IN PLACE CONDITIONS

A. Carefully cut, handle, and perform testing in such a manner as to not harm the pipe sample, adjacent structures, utilities, systems, equipment, existing landscaping or natural vegetation. The Contractor is fully responsible for such disturbance.

B. Repair and return damaged or disturbed property and facilities to their original condition.

3.03 PIPE CUTTING

A. All cutting/snapping of ACP samples shall occur after pipe removal from the water system. All removed ACP shall be through the nearest joint. Therefore, no cutting/snapping of pipe is allowed, except to generate the ACP samples required for lab testing

B. Prior to cutting, clearly and accurately mark the following on the sample of pipe to be cut and extracted for testing:

1. Crown of the pipe.
2. Owner-approved unique pipe ID (GIS asset ID number), and date.

C. Perform ACP cutting utilizing a snap cutter, chain cutter, or other tool capable of an even cut around the full cross section of the pipe without creation of ACP dust particles. Pipe samples must be 12-inches in length, minimum.

D. Prevent spread of friable asbestos fibers, flying particles, and dust using temporary enclosures, as needed.

E. The Owner's representative shall be the sole judge of the quality and acceptability of each cut. Re-cut any coarse, chipped, broken, or otherwise defective cuts of ACP at no cost to the Owner.

F. Avoid contamination (dust, dirt, grease) of ACP samples during extraction. Immediately repair the pipe in accordance with the Contract Documents.

3.04 PIPE HANDLING

A. Carefully handle ACP sample to not damage the cuts, pipe integrity, or results of the pipe testing. Mishandling of the ACP sample, including damage from transportation and delivery, that results in chipping, scraping, cracking, deforming, or other damage that may void the results of testing will not be acceptable. The Owner's representative shall be the sole judge of mishandling of the ACP sample. If a sample is mishandled, re-cut, test, and properly handle a new sample of ACP at no additional cost to the Owner.

B. Carefully bag and seal the sample air- tight with approved packaging and bagging materials. Clearly label the outside of the bagging with the unique pipe ID and date.

C. Individually package and label each sample. Keep packaged samples dry, sealed, and away from direct sunlight and high temperature during transportation.

D. Deliver the bagged and sealed sample to the Owner-approved laboratory for EDS testing.

3.05 LABORATORY TESTING

A. Contract with one of the following Owner-approved laboratories to perform EDS testing on each ACP sample. Complete Laboratory Testing and deliver results to Owner within six (6) calendar weeks of pipe cutting.

1. Wood PLC 9210 Sky Park Ct. San Diego, CA 92123
2. Applied Materials & Engineering, Inc. 980 41" Street, Oakland, CA 94608
3. Levelton (WSP) Laboratories Richmond, BC, Canada 150-12791 Clarke Place Richmond, BC V6V 2H9
4. Or equal

B. Arrange for safe delivery of ACP samples to the Owner-approved laboratory.

C. Equipment:

1. EDS equipment shall be equipped with a scanning electron microscope (SEM) capable of producing high resolution SEM images of cross-section (where analyses are being performed) and shall be able to generate EDS elemental area maps or phase maps.

D. Laboratory testing work and responsibilities

1. Prior to conducting testing, coordinate with the Owner to verify testing requirements, measurement and establish a testing protocol.
2. Calibrate EDS equipment by using test peaks of known energy, covering the full analytical span prior to testing ACP samples.

3. Perform EDS testing to measure and record percent element by weight for Aluminum (AI), Carbon (C), Calcium (Ca), Iron (Fe), Magnesium (Mg), Oxygen (O), and Silicon (Si) at the locations of largest internal stain loss and thinnest overall stain, as marked during Phenolphthalein stain testing. Phenolphthalein stain testing shall occur at the laboratory.

4. Allow sufficient process time for analysis and ensure a statistically significant number of counts in order to decide if a peak is present or absent. Present a table of maximum number of counts and atomic percentage.

5. At the lab, cut and perform testing on each segment of pipe per the following requirements:

   a. Measure and record percent by weight of each element at 10 equally spaced locations across the cut pipe surface, in a line perpendicular to the inner and outer wall edge tangent (i.e. along line used to measure wall thickness).

   b. Label each equally spaced location measurements 1 through 10, with point 1 being the reading closest to the inner pipe wall surface and point 10 being the reading closest to the outer pipe wall surface.

   c. Document the location of each set of 10 measurements by pipe ID and clockwise location relative to the crown of the pipe (i.e. crown is 12 o'clock).

   d. Document the total wall thickness where each set of measurements is taken.

   e. Provide all required data results to the Owner in Microsoft Excel file format only (.xlsx), or in a summary report provided by the lab. See figure 1 for all required data, to be included in the result summary.

6. Re-bag, seal and store ACP sample until confirmation from the Owner that the testing data provided is complete and received. After confirmation, the lab shall legally dispose of each tested ACP sample, at no additional cost to the owner.

7. Document site measurements provided on hard-copy print of Figure 1 delivered to the laboratory with the ACP samples in the digital Excel file of Figure 1. Transmit the completed file via email to the City's Project Manager with the file and email titled with the project name, project number, and unique pipe ID number. Include the project name, project number, and unique pipe ID number in the submittal e-mail, addressed to:

   [Stephanie Harrison] Stephanie.Harrison@carlsbadca.gov

Figure 1: Sample Owner's-approved Excel file template

Date of Cut:

Date of Lab Testing:

Location	SampleID	Clock Position	Pipe Wall Thickness (mm)	Internal Stain Loss (mm)	External Stain Loss (mm)	Element	10 EDS Samples per Location, Equally Spaced Across the Width of the Coupon — Percent Element by Weight — Inner Surface 1	2	3	4	5	6	7	8	9	Outer Surface 10	Comment
Thinnest Stain (1)	XXX-1					Al											
	XXX-1					C											
	XXX-1					Ca											
	XXX-1					Fe											
	XXX-1					Mg											
	XXX-1					O											
	XXX-1					Si											
Maximum Internal Stain Loss (2)	XXX-2					Al											
	XXX-2					C											
	XXX-2					Ca											
	XXX-2					Fe											
	XXX-2					Mg											
	XXX-2					O											
	XXX-2					Si											

To be filled out in the field by Contractor

To be filled out in lab by Laboratory Technician

Notes:

1. If Lab leaves any cells blank inside Figure 1, state specific reason in the table as to why that cell was left blank.
2. Remove greyshading in file once lab data has been entered into the spreadsheet
3. Populate Comments only as needed. Comments may be left by Contractor or Laboratory Technician

END OF SECTION

SECTION 15041

DISINFECTION OF PIPING

PART 1 - GENERAL

1.01 SUMMARY

A. This section describes requirements for disinfection by chlorination of potable and recycled water mains, services, pipe appurtenances and connections.

1.02 REFERENCED STANDARDS

A. The publications listed below form part of this specification to the extent referenced and are referred to in the text by the basic designation only. Reference shall be made to the latest edition of said standards unless otherwise called for.

1. American Water Works Association (AWWA).
   a. B300 Standard for Hypochlorites
   b. B301 Standard for Liquid Chlorine
   c. C651 Disinfecting Water Mains

1.03 RELATED WORK SPECIFIED ELSEWHERE

A. CMWD Standard Specifications 15000, 15044, 15056, 15057, 15061, and 15064

1.04 SERVICE APPLICATION

A. All water mains and appurtenances taken out of service for inspection, repairs, or other activity that might lead to contamination shall be disinfected before they are returned to service.

B. All new water mains and temporary high lines shall be disinfected prior to connection to the City's existing system

C. All components incorporated into a connection to the City's existing system shall be disinfected prior to installation.

1.05 SUBMITTALS

A. A written disinfection and dichlorination plan signed by a certified chlorinator shall be submitted to the Engineer for review and approval prior to starting disinfection or dichlorination operations. Plan for disinfection method and procedure shall include equipment used to inject the chlorine solution, gauges or scales to measure the rate at which chlorine is injected, qualifications of personnel, testing location and schedule, source of water and water disposal locations. Personnel performing the disinfection shall demonstrate a minimum of five years of experience in the chlorination and dichlorination of pipelines.

B. Qualification of certified testing laboratory.

C. Four copies of bacteriological test results to the Engineer upon completion of each test.

D. Emergency Response Plan.

1.06 DELIVERY, SOTRAGE AND HANDLING

A. Chlorination and dichlorination shall be performed by competent individuals knowledgeable and experienced in the operation of the necessary application and safety equipment in accordance with applicable Federal, State and Local laws and regulations. The transport, storage and handling of these materials shall be performed in accordance with Code of Federal Regulations (CFR) 1910.120 Hazardous Waste Operations and Emergency Response, CFR 49.172 Hazardous Materials Regulations, and the General Industry Safety Orders of the California Code of Regulations, Title 8, Section 5194.

1.07 CONCURRENT DISINFECTION AND HYDROSTATIC TESTING

A. The specified disinfection of the pipelines may be performed concurrently with the hydrostatic testing in accordance with Section 15044. In the event repairs are necessary, as indicated by the hydrostatic test, additional disinfection may be required by the Engineer in accordance with this specification.

1.08 CONNECTION TO EXISTING MAINS

A. Prior to connection to existing mains, disinfection and bacteriological testing shall be performed in accordance with this specification, and hydrostatic testing shall be performed per Section 15044. A City Connection Permit is required authorizing connection to an existing system shall and be given only on the basis of acceptable hydrostatic, disinfection and bacteriological test results. Connection to existing mains shall be performed in accordance with Section 15000.

PART 2 - MATERIALS

2.01 SODIUM HYPOCHLORITE (LIQUID)

A. Sodium hypochlorite is available in liquid form in glass or plastic containers, ranging in size from 0.95 L (1 Qt.) to 18.93 L (5 Gal.). The solution contains approximately 10% to15% available chlorine.

2.02 TABLET OR GRANULAR HYPOCHLORITE

A. Tablet or granular hypochlorite may be used if a solution container is utilized to provide a continuous feed method.

PART 3 - EXECUTION

3.01 GENERAL

A. Disinfection of pipelines shall not proceed until all appurtenances and any necessary sample ports have been installed and the Engineer provides authorization.

B. Every effort shall be made to keep the water main and its appurtenances clean and dry during the installation process.

C. All piping, valves, fittings, and appurtenances which become contaminated during installation shall be cleaned, rinsed with potable water, and then sprayed or swabbed with a 5 percent sodium hypochlorite disinfecting solution prior to installation.

D. Water mains under construction that become flooded by storm water, runoff, or groundwater shall be cleaned by draining and flushing with metered potable water until clear water is evident. Upon completion, the entire main shall be disinfected using a method approved by the Engineer.

3.02 METHODS

A. Sodium Hypochlorite Solution (Liquid)

1. Sodium hypochlorite solution shall be used for cleaning and swabbing piping and appurtenances immediately prior to installation and for disinfecting all components of connections to the City's existing system, in accordance with AWWA C651.

2. Sodium hypochlorite solution may be used for the disinfection of newly installed water mains. The solution shall be applied at a terminus of the system to be chlorinated using an injector which can adjust the amount of solution being injected into the piping system. The solution shall be injected in the appropriate concentration to achieve the specified concentration range of chlorine throughout the entire piping system. Where pumping equipment is used in conjunction with an injector, an integral backflow prevention device shall be used and connected to the potable water supply.

3. Water trucks, pumping equipment, piping, appurtenances and all other equipment in contact with potable water shall be disinfected prior to use.

4. Sodium hypochlorite solution may also be used to increase the total chlorine residual if the concentration from the initial chlorination of the system is found to be low. The solution shall be added to the system in sufficient amounts at appropriate locations to ensure that the disinfecting solution is present at a concentration within the specified range throughout the piping system.

3.03 DISCHARGE OF CHLORINATED WATER

A. Indiscriminate onsite disposal or discharge to sewer systems, storm drains, drainage courses or surface waters of chlorinated water is prohibited.

B. In locations where chlorine neutralization is required, the reducing agent shall be applied to the water as it exits the piping system. The Developer shall monitor the chlorine residual during the discharge operations. Total residual chlorine limits in these locations, and for the discharge of chlorinated water from the testing of pipelines to surface waters of the San Diego Region are as follows:

1. Total Residual Chlorine Effluent Limitations

   a. 30-Day Average - 0.002 mg/l

   b. Average Daily Maximum - 0.008 mg/l

   c. Instantaneous Maximum - 0.02 mg/l

2. The various methods of dichlorination available can remove residual chlorine to concentrations below standard analytical methods of detection, 0.02 mg/l, which will assure compliance with the effluent limit. The Developer will perform all necessary tests, keeping and providing records to the Engineer to ensure that the total residual chlorine effluent limitations listed above are met.

C. In locations where no hazard to the environment is evident based on the joint examination described above, the chlorinated water may be broadcast for dust control on the surface of the immediate site. Care shall be exercised in broadcasting the water to prevent runoff.

3.04 REDISINFECTION

A. If the initial disinfection fails to produce satisfactory bacteriological test results, the pipeline system shall be re-flushed and re-sampled. If the second set of samples does not produce satisfactory results, the pipeline system shall be re-chlorinated, flushed, and re-stamped. The chlorination, flushing, and sampling procedure shall continue until satisfactory results are obtained. Re-disinfection and retesting shall be at the Contractor's expense.

3.05 DISINFECTING TIE-INS AND CONNECTIONS

A. Pipes, fittings, valves and all other components incorporated into connections with the City's existing system shall be spray disinfected or swabbed with a liquid chlorine solution in accordance with AWWA C651 and as specified herein. Upon connection to the main, the line shall be flushed as directed by the City Engineer. Alternate methods such as "predisinfection" prior to installation in accordance with AWWA C651 may be required at the discretion of the City Engineer.

END OF SECTION

CONSTRUCTION PLANS

FOR THE

CMWD VALVE REPLACEMENT PHASE II

PROJECT NO. 5019-E

Carlsbad
Municipal Water District
CARLSBAD, CALIFORNIA

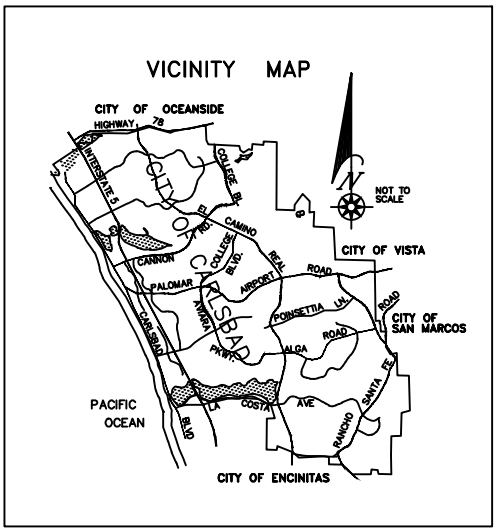

BOARD OF DIRECTORS

MATT HALL - PRESIDENT

PRIYA BHAT-PATEL - BOARD MEMBER

KEITH BLACKBURN - BOARD MEMBER

CORI SCHUMACHER - BOARD MEMBER

VACANT - BOARD MEMBER

SCOTT CHADWICK
EXECUTIVE MANAGER

ELAINE LUKEY
PUBLIC WORKS DIRECTOR

MAY 2020

BID SET

"DECLARATION OF RESPONSIBLE CHARGE"

I HEREBY DECLARE THAT I AM THE ENGINEER OF WORK FOR THIS PROJECT, THAT I HAVE EXERCISED RESPONSIBLE CHARGE OVER THE DESIGN OF THE PROJECT AS DEFINED IN SECTION 6703 OF THE BUSINESS AND PROFESSIONS CODE, AND THAT THE DESIGN IS CONSISTENT WITH CURRENT STANDARDS.

I UNDERSTAND THAT THE CHECK OF PROJECT DRAWINGS AND SPECIFICATIONS BY THE CITY OF CARLSBAD DOES NOT RELIEVE ME AS ENGINEER OF WORK, OF MY RESPONSIBILITIES FOR PROJECT DESIGN.

FIRM: KLEINFELDER
ADDRESS: 550 W C ST #1200
CITY, ST.: SAN DIEGO, CA
TELEPHONE: 619 831 4600
BY: _____ *DATE:* _____
(NAME OF ENGINEER)
R.C.E. NO.: _____
REGISTRATION EXPIRATION DATE: _____

G–1

REVIEWED BY: INSPECTOR	RECORD DRAWING DATE	CITY OF CARLSBAD ENGINEERING DEPARTMENT
THIS RECORD DRAWING HAS BEEN PREPARED, IN PART, BASED ON INFORMATION PROVIDED BY OTHERS. TO THE BEST KNOWLEDGE OF THE INSPECTOR INFORMATION PROVIDED IS REASONABLY ACCURATE.	DRAWING NO. XXX–X	DWN BY: CPR CHKD BY: BW RVWD BY: KH/EM
KLEINFELDER Bright People. Right Solutions.	SHEET 1 OF 48	PROJECT NO. 5019–E

IMPROVEMENT PLANS FOR:
CMWD VALVE REPLACEMENT PHASE II – BID DOCUMENTS

COVER SHEET

ACCEPTED BY:
DISTRICT ENGINEER — DATE 6/4/2020

DESCRIPTION	DRAWINGS NO.	SHEET NO.
COVER SHEET	G-1	1
SHEET LIST	G-2	2
KEYPLAN I	G-3	3
KEYPLAN II	G-4	4
GENERAL NOTES AND LEGEND	G-5	5
SITE 1 - EXISTING: PASEO CANDELERO AND VIA CANDREJO	C-01A	6
SITE 1 - PROPOSED: PASEO CANDELERO AND VIA CANDREJO	C-01B	7
SITE 2 - EXISTING: WALNUT AND GARFIELD	C-02A	8
SITE 2 - PROPOSED: WALNUT AND GARFIELD	C-02B	9
SITE 3 - EXISTING: CVR AND PAR	C-03A	10
SITE 3 - PROPOSED:CVR AND PAR	C-03B	11
SITE 4 - EXISTING: MAGNOLIA AND MONROE	C-04A	12
SITE 4 - PROPOSED: MAGNOLIA AND MONROE	C-04B	13
SITE 5 - EXISTING: THE SHOPPES AT CARLSBAD	C-05A	14
SITE 5 - PROPOSED: THE SHOPPES AT CARLSBAD	C-05B	15
SITE 6 - EXISTING: ESTRELLA DE MAR CT	C-06A	16
SITE 6- PROPOSED: ESTRELLA DE MAR CT	C-06B	17
SITE 7 - EXISTING: ESTRELLA DE MAR AND CARACOL CT	C-07A	18
SITE 7 - PROPOSED: ESTRELLA DE MAR AND CARACOL CT	C-07B	19
SITE 8 - EXISTING: ESTRELLA DE MAR AND MARAZUL WAY	C-08A	20
SITE 8 - PROPOSED: ESTRELLA DE MAR AND MARAZUL WAY	C-08B	21
SITE 9 - EXISTING: PINE AND HARDING	C-09A	22
SITE 9 - PROPOSED: PINE AND HARDING	C-09B	23
SITE 10 - EXISTING: PINE AND JEFFERSON	C-10A	24
SITE 10 - PROPOSED: PINE AND JEFFERSON	C-10B	25
SITE 11 - EXISTING: PINE AND MADISON ST	C-11A	26
SITE 11 - PROPOSED: PINE AND MADISON ST	C-11B	27
SITE 12 - EXISTING: TAMARACK AND HIBISCUS	C-12A	28
SITE 12 - PROPOSED: TAMARACK AND HIBISCUS	C-12B	29
SITE 13 - EXISTING: TAMARACK AND NAUTICAL	C-13A	30
SITE 13 - PROPOSED: TAMARACK AND NAUTICAL	C-13B	31
SITE 14 - EXISTING: BUENA VISTA AND HIGHLAND DR	C-14A	32
SITE 14 - PROPOSED: BUENA VISTA AND HIGHLAND DR	C-14B	33
SITE 15 - EXISTING: CARLSBAD VILLAGE DRIVE	C-15A	34
SITE 15 - PROPOSED: CARLSBAD VILLAGE DRIVE	C-15B	35
SITE 16 - EXISTING: BATIQUITOS DR AND DAISY AVE	C-16A	36
SITE 16 - PROPOSED: BATIQUITOS DR AND DAISY AVE	C-16B	37
SITE 17 - EXISTING: BATIQUITOS DR AND POPPY LN	C-17A	38
SITE 17 - PROPOSED: BATIQUITOS DR AND POPPY LN	C-17B	39
SITE 18 - EXISTING: POPPY LN	C-18A	40
SITE 18 - PROPOSED: POPPY LN	C-18B	41
SITE 19 - EXISTING: POPPY LN AND AZALEA PL	C-19A	42
SITE 19 - PROPOSED: POPPY LN AND AZALEA PL	C-19B	43
SITE 20 - EXISTING: AZALEA PL AND BEGONIA CT	C-20A	44
SITE 20 - PROPOSED: AZALEA PL AND BEGONIA CT	C-20B	45
DETAILS I	D-01	46
DETAILS II	D-02	47
RECORD DRAWING LIST	D-03	48

G–2

REVIEWED BY: RECORD DRAWING

INSPECTOR DATE

THIS RECORD DRAWING HAS BEEN PREPARED, IN PART, BASED ON INFORMATION PROVIDED BY OTHERS. TO THE BEST KNOWLEDGE OF THE INSPECTOR INFORMATION PROVIDED IS REASONABLY ACCURATE.

DRAWING NO. XXX–X

DWN BY: CPR
CHKD BY: BW
RVWD BY: KH/EM

KLEINFELDER Bright People. Right Solutions.

SHEET 2 OF 48

PROJECT NO. 5019–E

CITY OF CARLSBAD
ENGINEERING DEPARTMENT

IMPROVEMENT PLANS FOR:

CMWD VALVE REPLACEMENT
PHASE II – BID DOCUMENTS

SHEET LIST

ACCEPTED BY:

DISTRICT ENGINEER DATE 6/4/2020

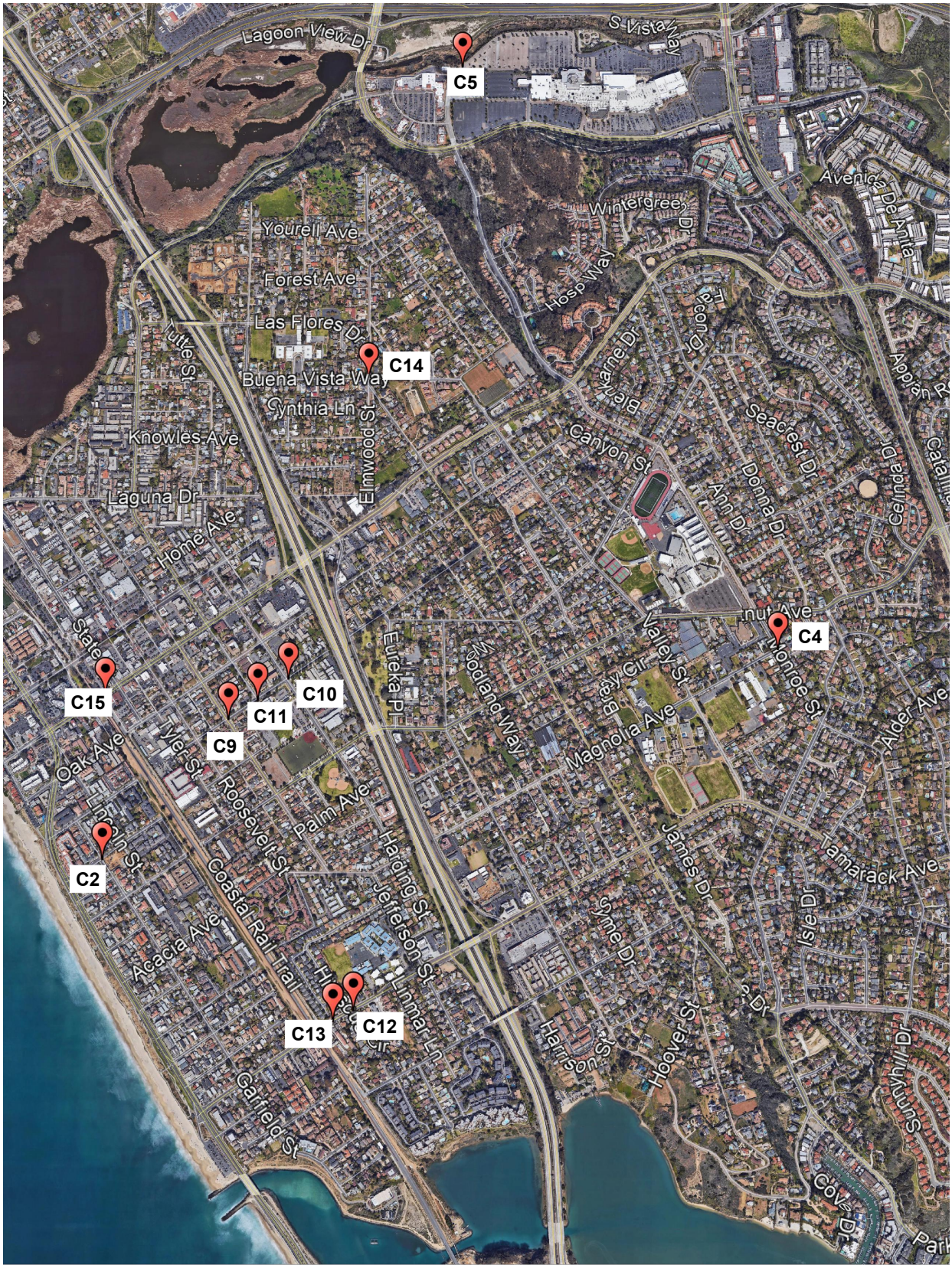

Legend

Site

N

G-3

REVIEWED BY:		RECORD DRAWING
INSPECTOR		DATE
THIS RECORD DRAWING HAS BEEN PREPARED, IN PART, BASED ON INFORMATION PROVIDED BY OTHERS. TO THE BEST KNOWLEDGE OF THE INSPECTOR INFORMATION PROVIDED IS REASONABLY ACCURATE.	DRAWING NO. XXX-X	DWN BY: CPR CHKD BY: BW RVWD BY: KH/EM
KLEINFELDER Bright People. Right Solutions.	SHEET 3 OF 48	PROJECT NO. 5019-E

CITY OF CARLSBAD
ENGINEERING DEPARTMENT

IMPROVEMENT PLANS FOR:

CMWD VALVE REPLACEMENT
PHASE II – BID DOCUMENTS

KEYMAP I

ACCEPTED BY:

DISTRICT ENGINEER — DATE 6/4/2020

Legend

Site

N

G–4

REVIEWED BY: RECORD DRAWING

INSPECTOR DATE

THIS RECORD DRAWING HAS BEEN PREPARED, IN PART, BASED ON INFORMATION PROVIDED BY OTHERS. TO THE BEST KNOWLEDGE OF THE INSPECTOR INFORMATION PROVIDED IS REASONABLY ACCURATE.

DRAWING NO. XXX–X

DWN BY: CPR
CHKD BY: BW
RVWD BY: KH/EM

KLEINFELDER
Bright People. Right Solutions.

SHEET 4 OF 48

PROJECT NO. 5019–E

CITY OF CARLSBAD
ENGINEERING DEPARTMENT

IMPROVEMENT PLANS FOR:

CMWD VALVE REPLACEMENT
PHASE II – BID DOCUMENTS

KEYPLAN II

ACCEPTED BY:

DISTRICT ENGINEER

6/4/2020
DATE

GENERAL NOTES

1. THIS PLAN SUPERSEDES ALL OTHER PLANS PREVIOUSLY APPROVED BY THE CITY OF CARLSBAD REGARDING IMPROVEMENTS SHOWN ON THIS SET OF PLANS.
2. APPROVAL OF THIS PLAN DOES NOT LESSEN OR WAIVE ANY PORTION OF THE CARLSBAD MUNICIPAL CODE, RESOLUTION OF CONDITIONAL APPROVAL, CITY STANDARDS OR OTHER ADDITIONAL DOCUMENTS LISTED HEREON AS THEY MAY PERTAIN TO THIS PROJECT. THE ENGINEER IN RESPONSIBLE CHARGE SHALL REVISE THESE PLANS WHEN NON-CONFORMANCE IS DISCOVERED.
3. CITY APPROVAL OF PLANS DOES NOT RELIEVE THE DEVELOPER OR ENGINEER-OF-WORK FROM RESPONSIBILITY FOR THE CORRECTION OF ERRORS AND OMISSIONS DISCOVERED DURING CONSTRUCTION. ALL PLAN REVISIONS SHALL BE PROMPTLY SUBMITTED TO THE CITY ENGINEER FOR APPROVAL.
4. A RIGHT-OF-WAY PERMIT FROM THE CITY ENGINEER WILL BE REQUIRED FOR ANY WORK IN THE PUBLIC RIGHT OF WAY. PRIOR TO PERMIT ISSUANCE, A CERTIFICATE OF INSURANCE MUST BE FILED NAMING THE CITY OF CARLSBAD AS AN ADDITIONAL INSURED ON THE PERMITTEE'S POLICY IN THE MINIMUM AMOUNT OF $1,000,000.00 FOR EACH OCCURRENCE OF LIABILITY. THE INSURANCE COMPANY WRITING THE POLICY MUST HAVE A RATING OF "A-" OR BETTER AND A SIZE CATEGORY OF CLASS VII OR BETTER AS ESTABLISHED BY "BESTS" KEY RATING GUIDE.
5. NO WORK SHALL BE COMMENCED UNTIL ALL PERMITS HAVE BEEN OBTAINED FROM THE CITY AND OTHER APPROPRIATE AGENCIES.
6. REVISION OF THESE PLANS MAY BE REQUIRED IF THE PROPOSED IMPROVEMENTS ARE NOT CONSTRUCTED PRIOR TO THE DEADLINE DATE OF THE IMPROVEMENT AGREEMENT.
7. NO REVISIONS WILL BE MADE TO THESE PLANS WITHOUT THE WRITTEN APPROVAL OF THE CITY ENGINEER, NOTED WITHIN THE REVISION BLOCK, ON THE APPROPRIATE SHEET OF THE PLANS AND TITLE SHEET.
8. ORIGINAL DRAWINGS SHALL BECOME THE PROPERTY OF THE CITY UPON BEING SIGNED BY THE CITY ENGINEER.
9. THE ORIGINAL DRAWING SHALL BE REVISED TO REFLECT AS-BUILT CONDITIONS BY THE ENGINEER-OF-WORK PRIOR TO FINAL ACCEPTANCE OF THE WORK BY THE CITY.
10. ACCESS FOR FIRE AND OTHER EMERGENCY VEHICLES SHALL BE MAINTAINED TO THE PROJECT SITE AT ALL TIMES DURING CONSTRUCTION.
11. WHERE TRENCHES ARE WITHIN CITY EASEMENTS, A SOILS REPORT COMPRISED OF: (A) SUMMARY SHEET, (B) LABORATORY WORK SHEETS AND (C) COMPACTION CURVES, SHALL BE SUBMITTED BY A PROFESSIONAL ENGINEER OF THE STATE OF CALIFORNIA, PRINCIPALLY DOING BUSINESS IN THE FIELD OF APPLIED SOILS MECHANICS. THE SOILS REPORT WILL BE SUBMITTED TO THE CITY ENGINEERING INSPECTOR WITHIN TWO WORKING DAYS OF COMPLETION OF FIELD TESTS. THE WRITTEN FIELD COMPACTION REPORT(S) SHALL BE IMMEDIATELY SUBMITTED TO THE CITY ENGINEERING INSPECTOR UPON COMPLETION OF THE FIELD TESTS.
12. A PRECONSTRUCTION MEETING SHALL BE HELD AT THE SITE PRIOR TO THE BEGINNING OF WORK AND SHALL BE ATTENDED BY ALL REPRESENTATIVES RESPONSIBLE FOR CONSTRUCTION, INSPECTION, SUPERVISION, TESTING AND ALL OTHER ASPECTS OF THE WORK. THE CONTRACTOR SHALL SCHEDULE THE MEETING BY CALLING THE INSPECTION LINE AT (760) 438-3891 AT LEAST FIVE (5) WORKING DAYS PRIOR TO STARTING CONSTRUCTION. APPROVED DRAWINGS MUST BE AVAILABLE PRIOR TO SCHEDULING.
13. THE CONTRACTOR SHALL NOTIFY THE CITY OF CARLSBAD ENGINEERING INSPECTION DEPARTMENT 48 HOURS PRIOR TO STARTING WORK SO THAT INSPECTION MAY BE PROVIDED – TELEPHONE NO. (760)438-3891.
14. THE OWNER AND/OR APPLICANT THROUGH THE DEVELOPER AND/OR CONTRACTOR SHALL DESIGN, CONSTRUCT AND MAINTAIN ALL SAFETY DEVICES, INCLUDING SHORING, AND SHALL BE SOLELY RESPONSIBLE FOR CONFORMING TO ALL LOCAL, STATE AND FEDERAL SAFETY AND HEALTH STANDARDS, LAWS AND REGULATIONS.
15. THE CONTRACTOR SHALL CONFORM TO LABOR CODE SECTION 6705 BY SUBMITTING A DETAIL PLAN TO THE CITY ENGINEER AND/OR CONCERNED AGENCY SHOWING THE DESIGN OF SHORING, BRACING SLOPE OR OTHER PROVISIONS TO BE MADE OF WORKER PROTECTION FROM THE HAZARD OF CAVING GROUND DURING THE EXCAVATION OF SUCH TRENCH OR TRENCHES OR DURING THE PIPE INSTALLATION THEREIN. THIS PLAN MUST BE PREPARED FOR ALL TRENCHES FIVE FEET (5') OR MORE IN DEPTH AND APPROVED BY THE CITY ENGINEER AND/OR CONCERNED AGENCY PRIOR TO EXCAVATION. IF THE PLAN VARIES FROM THE SHORING SYSTEM STANDARDS ESTABLISHED BY THE CONSTRUCTION SAFETY ORDERS, TITLE 8 CALIFORNIA ADMINISTRATIVE CODE, THE PLAN SHALL BE PREPARED BY A REGISTERED ENGINEER AT THE CONTRACTORS EXPENSE. A COPY OF THE OSHA EXCAVATION PERMIT MUST BE SUBMITTED TO THE INSPECTOR PRIOR TO EXCAVATION.
16. IF ANY ARCHAEOLOGICAL RESOURCES ARE DISCOVERED WITHIN ANY WORK ZONE DURING CONSTRUCTION, OPERATIONS WILL CEASE IMMEDIATELY AND THE PERMITTEE WILL NOTIFY THE CITY ENGINEER. OPERATIONS WILL NOT RESTART UNTIL THE PERMITTEE HAS RECEIVED WRITTEN AUTHORITY FROM THE CITY ENGINEER TO DO SO.
17. ALL OPERATIONS CONDUCTED ON THE SITE OR ADJACENT THERETO, INCLUDING WARMING UP, REPAIR, ARRIVAL, DEPARTURE OR OPERATION OF TRUCKS, EARTHMOVING EQUIPMENT, CONSTRUCTION EQUIPMENT AND ANY OTHER ASSOCIATED GRADING EQUIPMENT SHALL BE LIMITED TO THE PERIOD BETWEEN 7:00 A.M. AND 6:00 P.M. EACH DAY, MONDAY THRU FRIDAY AND NO EARTHMOVING OR GRADING OPERATIONS SHALL BE CONDUCTED ON WEEKENDS OR HOLIDAYS. (A LIST OF CITY HOLIDAYS IS AVAILABLE AT THE ENGINEERING DEPARTMENT COUNTER.)
18. ALL OFF-SITE HAUL ROUTES SHALL BE SUBMITTED BY THE CONTRACTOR TO THE CITY ENGINEER FOR APPROVAL TWO FULL WORKING DAYS PRIOR TO BEGINNING OF WORK. THE CONTRACTOR SHALL BE RESPONSIBLE FOR ANY DEBRIS OR DAMAGE OCCURRING ALONG THE HAUL ROUTE OR ADJACENT STREETS AS A RESULT OF THE GRADING OPERATION.
19. NO BLASTING SHALL BE COMMENCED WITHOUT A CITY ENGINEER APPROVED BLASTING PROGRAM AND BLASTING PERMIT.
20. THE EXISTENCE AND LOCATION OF UTILITY STRUCTURES AND FACILITIES SHOWN ON THE CONSTRUCTION PLANS WERE OBTAINED BY A SEARCH OF THE AVAILABLE RECORDS. ATTENTION IS CALLED TO THE POSSIBLE EXISTENCE OF OTHER UTILITY FACILITIES OR STRUCTURES NOT SHOWN OR IN A LOCATION DIFFERENT FROM THAT SHOWN ON THE PLANS. THE CONTRACTOR IS REQUIRED TO TAKE DUE PRECAUTIONARY MEASURES TO PROTECT THE UTILITIES SHOWN ON THE PLANS AND ANY OTHER EXISTING FACILITIES OR STRUCTURES NOT SHOWN.
21. THE CONTRACTOR SHALL VERIFY THE LOCATION OF ALL EXISTING FACILITIES (ABOVEGROUND AND UNDERGROUND) WITHIN THE PROJECT SITE SUFFICIENTLY AHEAD OF THE CONSTRUCTION TO PERMIT THE REVISIONS OF THE CONSTRUCTION PLANS IF IT IS FOUND THAT THE ACTUAL LOCATIONS ARE IN CONFLICT WITH THE PROPOSED WORK.
22. THE CONTRACTOR SHALL NOTIFY AFFECTED UTILITY COMPANIES (SEE BELOW) AT LEAST TWO FULL WORKING DAYS PRIOR TO STARTING CONSTRUCTION NEAR THEIR FACILITIES AND SHALL COORDINATE WORK WITH A COMPANY REPRESENTATIVE.

UNDERGROUND SERVICE ALERT	(800)422-4133
SDG&E	(800)411-7343
AT&T	(800)892-0123
TIME WARNER CABLE	(760)438-7741
COX COMMUNICATIONS	(619)262-1122
CITY OF CARLSBAD(STREETS AND STORM DRAIN)	(760)434-2980
*CITY OF CARLSBAD(SEWER,WATER & RECLAIMED WATER)	(760)438-2722
*SAN DIEGUITO WATER DISTRICT	(760)633-2650
*LEUCADIA WASTEWATER DISTRICT	(760)753-0155
*VALLECITOS WATER DISTRICT	(760)744-0460
*OLIVENHAIN WATER DISTRICT	(760)753-6466
*BUENA SANITATION DISTRICT	(760)726-1340 x1330

* AS APPROPRIATE

23. IN ACCORDANCE WITH THE CITY STORM WATER STANDARDS ALL STORM DRAIN INLETS CONSTRUCTED BY THIS PLAN SHALL INCLUDE "STENCILS" BE ADDED TO PROHIBIT WASTE DISCHARGE DOWNSTREAM. STENCILS SHALL BE ADDED TO THE SATISFACTION OF THE CITY ENGINEER.
24. CONTRACTOR IS RESPONSIBLE FOR PROVING ALL TEMPORARY AND PERMANENT LAYDOWN AREAS FOR THE DURATION OF CONSTRUCTION. CONTRACTOR SHOULD ACCOUNT FOR ALL COSTS ASSOCIATED WITH LAYDOWN AREAS UNDER THE BASE BID PRICE.
25. CONTRACTOR SHALL PROVIDE STORM WATER TIER II SWPPP AT NO ADDITIONAL COST TO THE OWNER. FOR DISTRICT STANDARD TIER 2 SWPPP TEMPLATE PLEASE VISIT: "HTTPS://WWW.CARLSBADCA.GOV/SERVICES/DEPTS/LANDEV/LANDDEV.ASP"
26. CONTRACTOR SHALL PROVIDE TRAFFIC CONTROL PLANS FOR EACH SITE, PER THE DISTRICT'S TRANSPORTATION AND HIGHWAY DESIGN MANUAL AT NO ADDITIONAL COST TO THE OWNER. FOR THE DISTRICT STANDARDS AND TRANSPORTATION AND HIGHWAY DESIGN MANUAL PLEASE VISIT: "HTTPS://WWW.CARLSBADCA.GOV/SERVICES/DEPTS/LANDDEV/LANDDEV.ASP"

WATER NOTES

1. WATER & RECYCLED WATER MAIN AND APPURTENANCES SHALL BE CONSTRUCTED IN ACCORDANCE WITH THE "CITY OF CARLSBAD ENGINEERING STANDARDS" (LATEST EDITION) VOLUMES 2 & 3.
2. BEFORE ANY CONNECTION OR SHUT DOWN OF VALVES ON EXISTING C.M.W.D. LINES, A PERMIT SHALL BE OBTAINED FROM THE C.M.W.D. OFFICE AND MUST BE SIGNED AND APPROVED BY THE CITY OF CARLSBAD'S DEPUTY CITY ENGINEER AND THE UTILITY OPERATIONS' PUBLIC WORKS MANAGER.
3. THE CONTRACTOR SHALL NOTIFY THE CITY OF CARLSBAD ENGINEERING INSPECTION DEPARTMENT 48 HOURS PRIOR TO STARTING WORK SO THAT INSPECTION MAY BE PROVIDED – TELEPHONE NO. (760)438-3891.
4. NO TREES OR STRUCTURES SHALL BE ALLOWED IN THE WATER LINE EASEMENT, ALL EXISTING TREES AND STRUCTURES SHALL BE REMOVED PRIOR TO COMMENCEMENT OF WORK – ANY EXCEPTIONS SHALL REQUIRE WRITTEN PERMISSION FROM THE DISTRICT ENGINEER.
5. ALL BURIED COPPER PIPING AND APPURTENANCES SHALL BE PROTECTED BY MEANS OF CATHODIC PROTECTION. IF DEVELOPER/OWNER CONDUCTS A SOILS TEST REPORT AND DEMONSTRATES THAT PROTECTION CAN BE PERFORMED IN ANOTHER MANNER, THE DISTRICT ENGINEER WILL CONSIDER AN ALTERNATIVE FORM OF PROTECTION.
6. THE EXACT HORIZONTAL AND VERTICAL ALIGNMENT AND TYPE OF MATERIALS OF THE FIRE LINE LOCATED BETWEEN THE DETECTOR CHECK VALVE AND BUILDING SHALL BE DETERMINED BY THE CITY OF CARLSBAD FIRE MARSHAL.
7. ALL POTABLE WATER SERVICES SHALL BE 1" AND ALL METERS SHALL BE 1" (UNLESS OTHERWISE NOTED ON PLANS).
8. ALL WATER METER BOXES SHALL BE 17" X 30" X 12" POLYMER CONCRETE AS MANUFACTURED BY ARMORCAST OR EQUAL.
9. MINIMUM SPACING BETWEEN POTABLE WATER SERVICES AND SEWER LATERALS SHALL BE 10 FEET.
10. THE TOP OF WATER METER BOXES SHALL BE FLUSH WITH THE FINISHED SURFACE GRADE.
11. CONSTRUCTION OF WATER MAINS AND RECYCLED WATER MAINS SHALL ADHERE TO THE "CRITERIA FOR THE SEPARATION OF WATER MAINS AND SANITARY SEWERS" PUBLISHED BY THE STATE OF CALIFORNIA'S DEPARTMENT OF HEALTH SERVICES.
12. AXIAL DEFLECTION AT THE PIPE JOINTS IS NOT ALLOWED. THE USE OF A HIGH-DEFLECTION COUPLING AT A PIPE JOINT MAY BE PERMITTED BY THE INSPECTOR ON A CASE BY CASE BASIS NOT TO EXCEED 4 DEGREES TOTAL DEFLECTION PER COUPLING (2 DEGREES/EACH GASKET). USE CERTAINTEED "VINYL-IRON" H.D. FOR C900.
13. BEFORE CONSTRUCTION BEGINS IN ANY PUBLIC RIGHT OF WAY, A CITY RIGHT OF WAY PERMIT SHALL BE REQUIRED.
14. CUTTING OF ASBESTOS CEMENT PIPE (ACP) WILL ONLY BE PERFORMED FOR SAMPLING AS DETAILED IN PROJECT SPECIFICATIONS CONTRACTOR SHALL REMOVE ACP PIPE TO THE NEAREST JOINT.
15. PRIOR TO BACKFILL, INSTALL TRACER WIRE ON TOP OF PIPE AND SECURE IN PLACE WITH 2-INCH WIDE PLASTIC ADHESIVE TAPE AT MAXIMUM 10-FOOT INTERVALS. WIRE TO ENTER VALVE STANDS BY MEANS OF DRILLED HOLE IN PIPE STAND WALL JUST BELOW 4TTBOX. WIRE IS NOT TO INTERFERE WITH VALVE NUT OPERATION. RUN TRACER WIRE CONTINUOUSLY ALONG PIPE AND TERMINATE IN ADJACENT VALVE BOXES FOR BURIED ASSEMBLIES OR BURIED VALVES. WHERE BURIED SPLICES OCCUR, USE AN ELECTRICAL EPOXY RESIN SUCH AS SCOTCHCAST, OR APPROVED EQUAL. PROVIDE 24 INCHES OF COILED WIRE AT ACCESS POINTS FOR ATTACHMENTS OF PIPE LOCATING EQUIPMENT. EACH INSTALLED RUN OF PIPE SHALL BE CAPABLE OF BEING LOCATED USING THE TRACER WIRE. PROTECT WIRE INSULATION FROM DAMAGE DURING INSTALLATION AND BACKFILLING. WIRE INSULATION THAT IS BROKEN, CUT, OR DAMAGED SHALL BE REPLACED.
   TRACER WIRE SHALL BE AWG NO. 8 STRANDED COPPER WIRE WITH HIGH MOLECULAR WEIGHT POLYETHYLENE (HMW/PE) INSULATION SPECIFICALLY DESIGNED FOR DIRECT BURIAL IN CORROSIVE SOIL OR WATER. POLYETHYLENE INSULATION SHALL CONFORM TO ASTM D 1248, TYPE 1, CLASS C. WIRES WITH CUT OR DAMAGED INSULATION ARE NOT ACCEPTABLE AND REPLACEMENT OF THE ENTIRE WIRE WHICH HAS BEEN DAMAGED WILL BE REQUIRED AT THE CONTRACTOR'S EXPENSE.
16. LENGTH OF PIPE REMOVED AND NEWLY INSTALLED WILL VARY FROM SITE TO SITE. CONTRACTOR SHALL REMOVE AND PLACE PIPE AT EXISTING JOINTS PER DETAIL 2, SHEET D-2

SIGNING AND STRIPING NOTES

1. THE CONTRACTOR IS RESPONSIBLE FOR INSTALLING ALL SIGNING AND STRIPING.
2. SIGNING, STRIPING AND PAVEMENT MARKINGS SHALL CONFORM TO THE CALIFORNIA MANUAL ON UNIFORM TRAFFIC CONTROL DEVICES (FHWA'S MUTCD 2003 REVISION 1, AS AMENDED FOR USE IN CALIFORNIA), CALTRANS STANDARD SPECIFICATIONS (JULY 2006 OR LATEST VERSION THEREOF), THESE PLANS AND THE SPECIAL PROVISIONS.
3. ALL SIGNING AND STRIPING IS SUBJECT TO THE APPROVAL OF THE PUBLIC WORKS DIRECTOR OR THEIR REPRESENTATIVE, PRIOR TO INSTALLATION.
4. ANY DEVIATION FROM THESE SIGNING AND STRIPING PLANS SHALL BE APPROVED BY THE ENGINEER OF WORK AND PUBLIC WORKS DIRECTOR PRIOR TO ANY CHANGE IN THE FIELD.
5. ALL SIGNING AND STRIPING SHALL BE REFLECTIVE PER CALTRANS SPECIFICATIONS. STRIPING SHALL BE REPAINTED TWO WEEKS AFTER INITIAL PAINTING. SIGNING SHALL USE ENCAPSULATED LENS REFLECTIVE SHEETING (HIGH INTENSITY OR EQUAL).
6. PRIOR TO FINAL ACCEPTANCE OF STREET IMPROVEMENTS, ALL STREET STRIPING AND AND MARKINGS WITHIN A 500' PERIMETER OF THE CONSTRUCTION PROJECT WILL BE RESTORED TO A "LIKE NEW" CONDITION, IN A MANNER MEETING THE APPROVAL OF THE CITY INSPECTOR.
7. EXACT LOCATION OF STRIPING AND STOP LIMIT LINES SHALL BE APPROVED BY THE PUBLIC WORKS DIRECTOR OR THEIR REPRESENTATIVE PRIOR TO INSTALLATION.
8. CONTRACTOR SHALL REMOVE ALL CONFLICTING PAINTED LINES, MARKINGS AND PAVEMENT LEGENDS BY GRINDING. DEBRIS SHALL BE PROMPTLY REMOVED BY THE CONTRACTOR.
9. ALL PAVEMENT LEGENDS SHALL BE THE LATEST VERSION OFTHE CALTRANS METRIC STENCILS.
10. LIMIT LINES AND CROSSWALKS SHALL BE FIELD LOCATED. CROSSWALKS SHALL HAVE 10' INSIDE DIMENSION UNLESS OTHERWISE SPECIFIED.
11. ALL CROSSWALKS, LIMIT LINES, STOP BARS, PAVEMENT ARROWS AND PAVEMENT LEGENDS SHALL BE THERMOPLASTIC UNLESS OTHERWISE SPECIFIED.
12. FIRE HYDRANT PAVEMENT MARKERS SHALL CONFORM TO THE CALIFORNIA MANUAL ON UNIFORM TRAFFIC CONTROL DEVICES (FHWA'S MUTCD 2003 REVISION 1, AS AMENDED FOR USE IN CALIFORNIA) AND SAN DIEGO REGIONAL STANDARD DRAWING M-19.
13. ALL MEDIAN NOSES AND FLARES SHALL BE PAINTED YELLOW.
14. ALL SIGNS SHALL BE STANDARD SIZE AS SHOWN IN THE CALIFORNIA MANUAL ON UNIFORM TRAFFIC CONTROL DEVICES (FHWA'S MUTCD 2003 REVISION1, AS AMENDED FOR USE IN CALIFORNIA) UNLESS OTHERWISE SPECIFIED.
15. SIGN POSTS SHALL BE SQUARE PERFORATED STEEL TUBING WITH BREAKAWAY BASE PER SAN DIEGO REGIONAL STANDARD DRAWING M-45.
16. WHEN A SIGN IS ATTACHED TO A POLE, IT SHALL BE MOUNTED USING A STANDARD CITY OF CARLSBAD MOUNTING BRACKET WITH STRAPS.
17. EXISTING SIGNS REMOVED BY THE CONTRACTOR SHALL BE DELIVERED BY THE CONTRACTOR TO THE CITY OF CARLSBAD PUBLIC WORKS YARD AT 405 OAK AVENUE.
18. ALL SIGNS SHOWN ON THESE PLANS SHALL BE NEW SIGNS PROVIDED AND INSTALLED BY THE CONTRACTOR EXCEPT THOSE SIGNS SPECIFICALLY SHOWN AS EXISTING TO BE RELOCATED OR TO REMAIN.
19. (IF NECESSARY) WHERE R4-7 SIGN AND OM1-3 OBJECT MARKER ARE TO BE INSTALLED IN A 2-FOOT WIDE MEDIAN NOSE, THE R4-7 SIGN SHALL BE 18"X24" AND THE OM1-3 OBJECT MARKER SHALL BE 12"X12"

LEGEND

DESCRIPTION	ABREVIATION	C.M.W.D DWG NO.	SYMBOL
WATER PIPELINE	W	NONE	— W —
RECYCLED WATER PIPELINE	RW	NONE	— RW —
WATER VALVE (GATE AND INSERTION)	(GV,IV)	W-16	
WATER VALVE (BUTTERFLY)	BV	W-17	
BLOW OFF ASSEMBLY	BO	W-6	
MANUAL AIR RELEASE ASSEMBLY	MAR	W-6	
AIR VACUUM VALVE ASSEMBLY	AVA	NONE	
WATER SERVICE	W	W-3	
FIRE HYDRANT	FH	W-12	
STORM DRAIN LINE	D	NONE	— D —
SEWER MAIN	S	NONE	— S —
GAS MAIN	GM	NONE	— G —
TELECOM LINE	T	NONE	— T —
ELECTRICAL CONDUIT	E	NONE	— E —

ABBREVIATIONS

AC	ASPHALT CEMENT
ACP	ASBESTOS CEMENT PIPE
APPROX.	APPROXIMATE
BO	BLOW OFF
CL OR ℄	CENTERLINE
CONC.	CONCRETE
CMWD	CARLSBAD MUNICIPAL WATER DISTRICT
DET.	DETAIL
D.I.	DUCTILE IRON
DIA.	DIAMETER
DIP	DUCTILE IRON PIPE
DWTM	DOMESTIC WATER TRANSMISSION MAIN
EA	EACH
EL	ELEVATION
ELEC	ELECTRICAL
EX OR EXIST.	EXISTING
FL	FLANGE
FM	FORCE MAIN
FT	FEET
GV.	GATE VALVE
INV.	INVERT
IRR.	IRRIGATION LINE (W OR RW)
LF	LINEAR FEET
MAX.	MAXIMUM
MAR	MANUAL AIR RELEASE VALVE
MIN.	MINIMUM
MJ	MECHANICAL JOINT
N.T.S.	NOT TO SCALE
O.D.	OUTSIDE DIAMETER
PAVT.	PAVEMENT
PC	PRECAST
PE	PLAIN END
PO	PUSH ON
PROP	PROPOSED
PVC	POLYVINYL CHLORIDE
RCP	REINFORCED CONCRETE PIPE
S	SLOPE
SF.	SQUARE FOOT
SD	STORM DRAIN
SMH	SEWER MANHOLE
SP	STEEL PIPE
SS	SANITARY SEWER
ST.	STREET
STA.	STATION
STD.	STANDARD
TB	THRUST BLOCK
TELE	TELECOMMUNICATIONS
TYP.	TYPICAL
VCP	VITRIFIED CLAY PIPE
VIF	VERIFY IN FIELD
WM	WATER MAIN

G-5

REVIEWED BY: RECORD DRAWING

INSPECTOR DATE

THIS RECORD DRAWING HAS BEEN PREPARED, IN PART, BASED ON INFORMATION PROVIDED BY OTHERS. TO THE BEST KNOWLEDGE OF THE INSPECTOR INFORMATION PROVIDED IS REASONABLY ACCURATE.

DRAWING NO. XXX-X

DWN BY: CPR
CHKD BY: BW
RVWD BY: KH/EM

KLEINFELDER Bright People. Right Solutions.

SHEET 5 OF 48

PROJECT NO. 5019-E

CITY OF CARLSBAD
ENGINEERING DEPARTMENT

IMPROVEMENT PLANS FOR:
CMWD VALVE REPLACEMENT
PHASE II – BID DOCUMENTS

GENERAL NOTES AND LEGEND

ACCEPTED BY:

DISTRICT ENGINEER DATE 6/4/2020

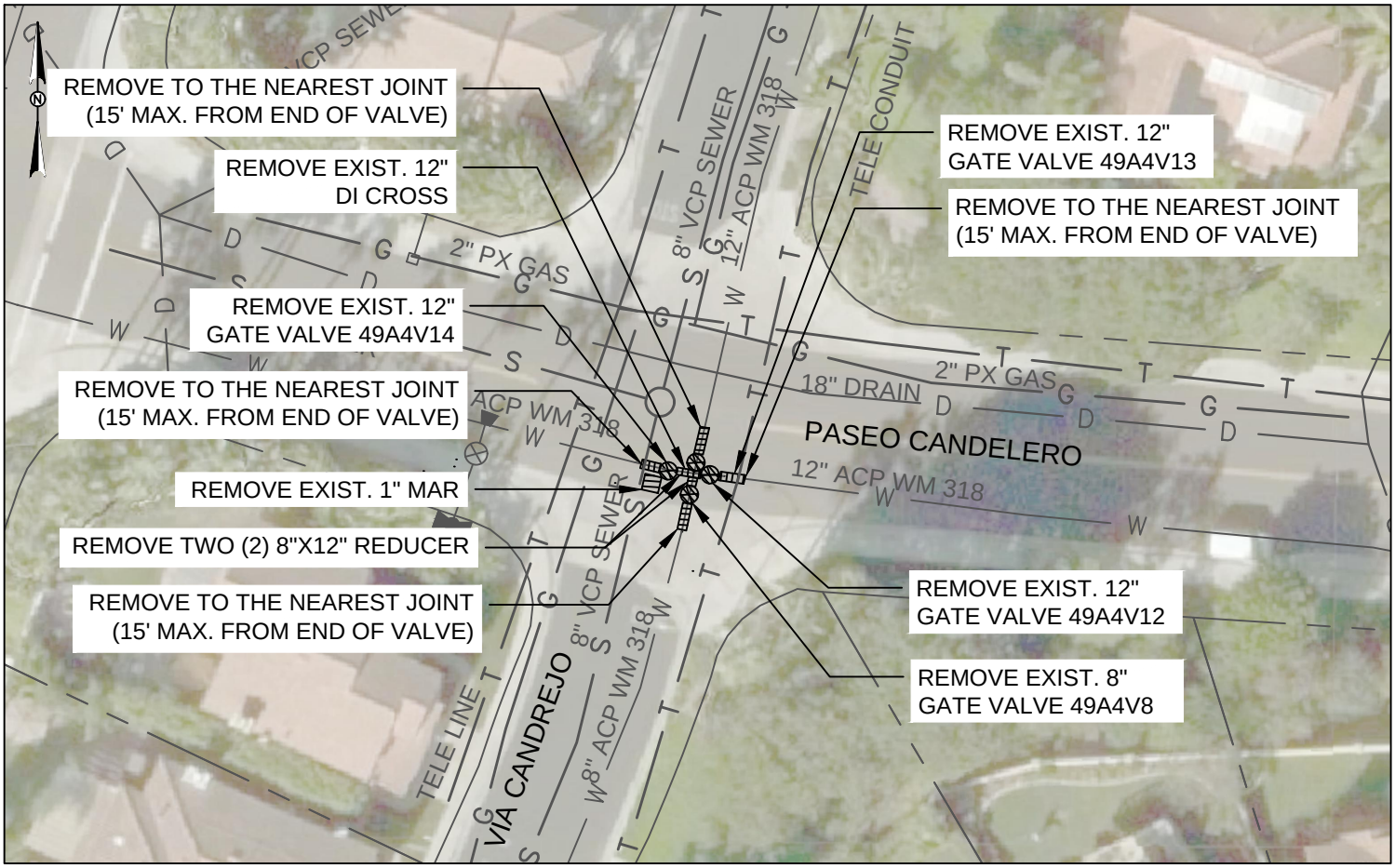

NOTE:

1. ASSUME EXISTING PAVEMENT TO BE 4" AC PAVEMENT WITH 12" OF CLASS II AGGREGATE BASE.

PLAN

SCALE: 1" = 40'

0 40 80

SCALE: 1" = 40' SCALE IN FEET

PHOTO 1 - FROM SOUTH WEST

C–1A

REVIEWED BY: RECORD DRAWING INSPECTOR DATE		CITY OF CARLSBAD ENGINEERING DEPARTMENT
THIS RECORD DRAWING HAS BEEN PREPARED, IN PART, BASED ON INFORMATION PROVIDED BY OTHERS. TO THE BEST KNOWLEDGE OF THE INSPECTOR INFORMATION PROVIDED IS REASONABLY ACCURATE.	DRAWING NO. XXX–X	DWN BY: CPR CHKD BY: BW RVWD BY: KH/EM
KLEINFELDER Bright People. Right Solutions.	SHEET 6 OF 48	PROJECT NO. 5019–E

RECORD PLANS FOR:

CMWD VALVE REPLACEMENT PHASE II

SITE NO.:1 – EXISTING

ACCEPTED BY:

DISTRICT ENGINEER DATE 6/4/2020

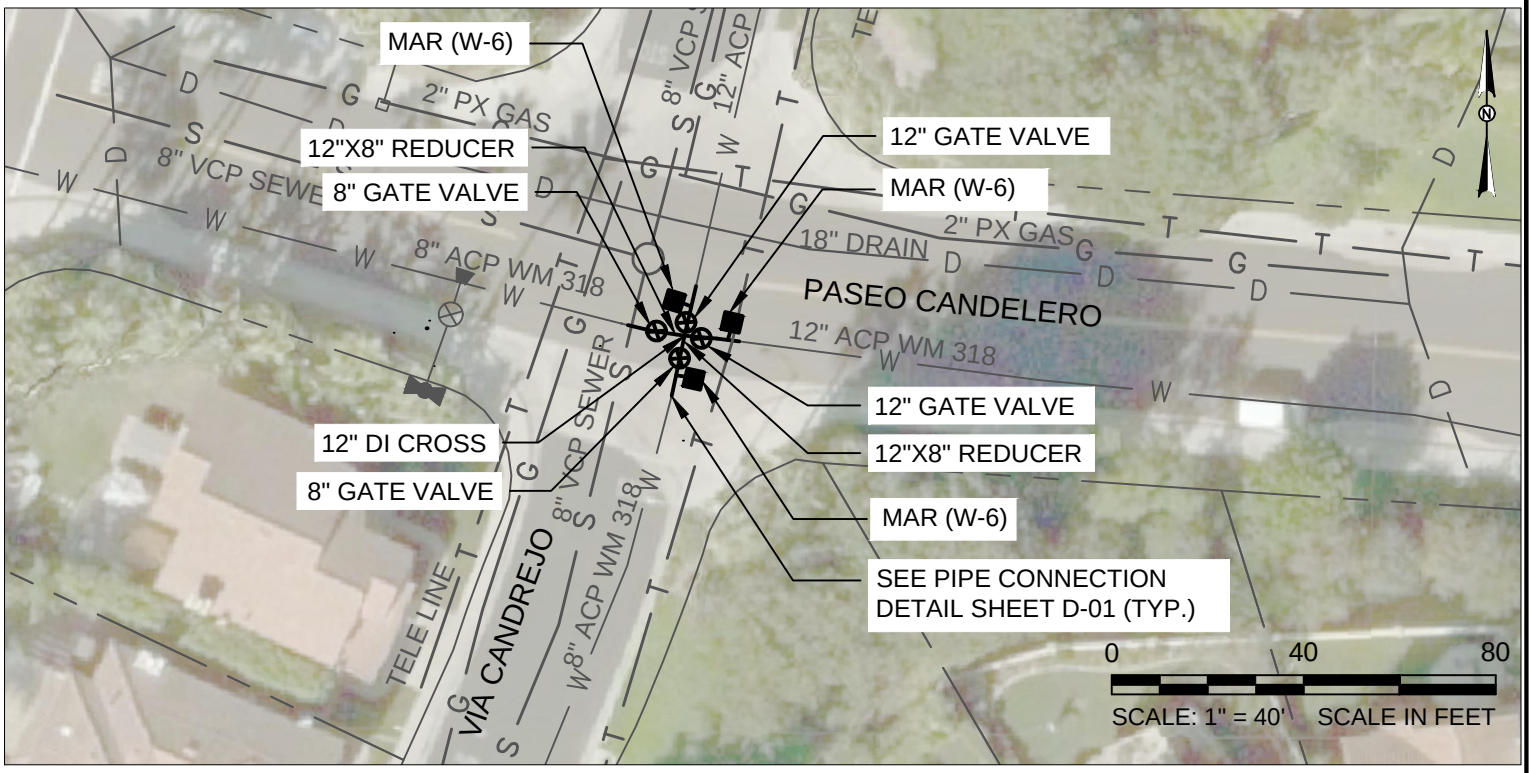

NOTE:

1. SEE CMWD STD. DWGS GS 24-GS 28 FOR TRENCH DETAILS.

PLAN

SCALE: 1" = 40'

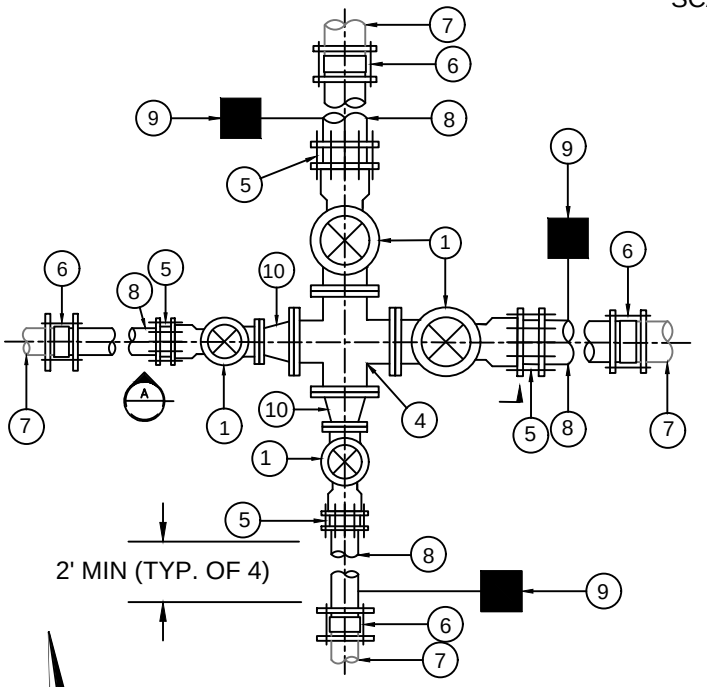

VALVE RELOCATION PLAN
N.T.S.

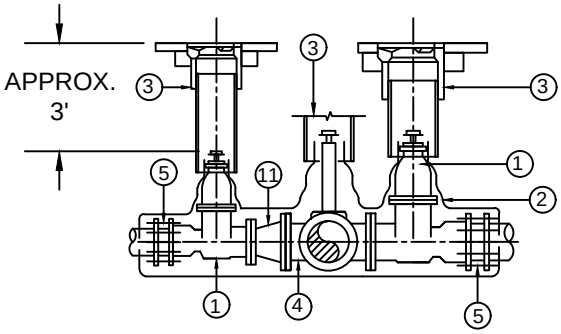

VALVE RELOCATION (SECTION A)

ITEM	DESCRIPTION
1	GATE VALVE FLG x MJ (W-16)
2	POLYETHYLENE ENCASEMENT
3	VALVE BOX ASSEMBLY(W-13)
4	12" DI CROSS FLG x FLG
5	RESTRAINED MECHANICAL JOINT FITTING
6	PVC TO AC TRANSITION COUPLING
7	EXISTING AC PIPE
8	C900 PVC PIPE (W-2)
9	MANUAL AIR RELEASE VALVE (W-6)
10	8" x 12" DI REDUCER FLG X FLG

C–1B

REVIEWED BY: RECORD DRAWING

INSPECTOR DATE

THIS RECORD DRAWING HAS BEEN PREPARED, IN PART, BASED ON INFORMATION PROVIDED BY OTHERS. TO THE BEST KNOWLEDGE OF THE INSPECTOR INFORMATION PROVIDED IS REASONABLY ACCURATE.

DRAWING NO. XXX–X

DWN BY: CPR
CHKD BY: BW
RVWD BY: KH/EM

KLEINFELDER Bright People. Right Solutions.

SHEET 7 OF 48

PROJECT NO. 5019–E

CITY OF CARLSBAD
ENGINEERING DEPARTMENT

RECORD PLANS FOR:
CMWD VALVE REPLACEMENT PHASE II

SITE NO.:1 – PROPOSED

ACCEPTED BY:
DISTRICT ENGINEER
6/4/2020
DATE

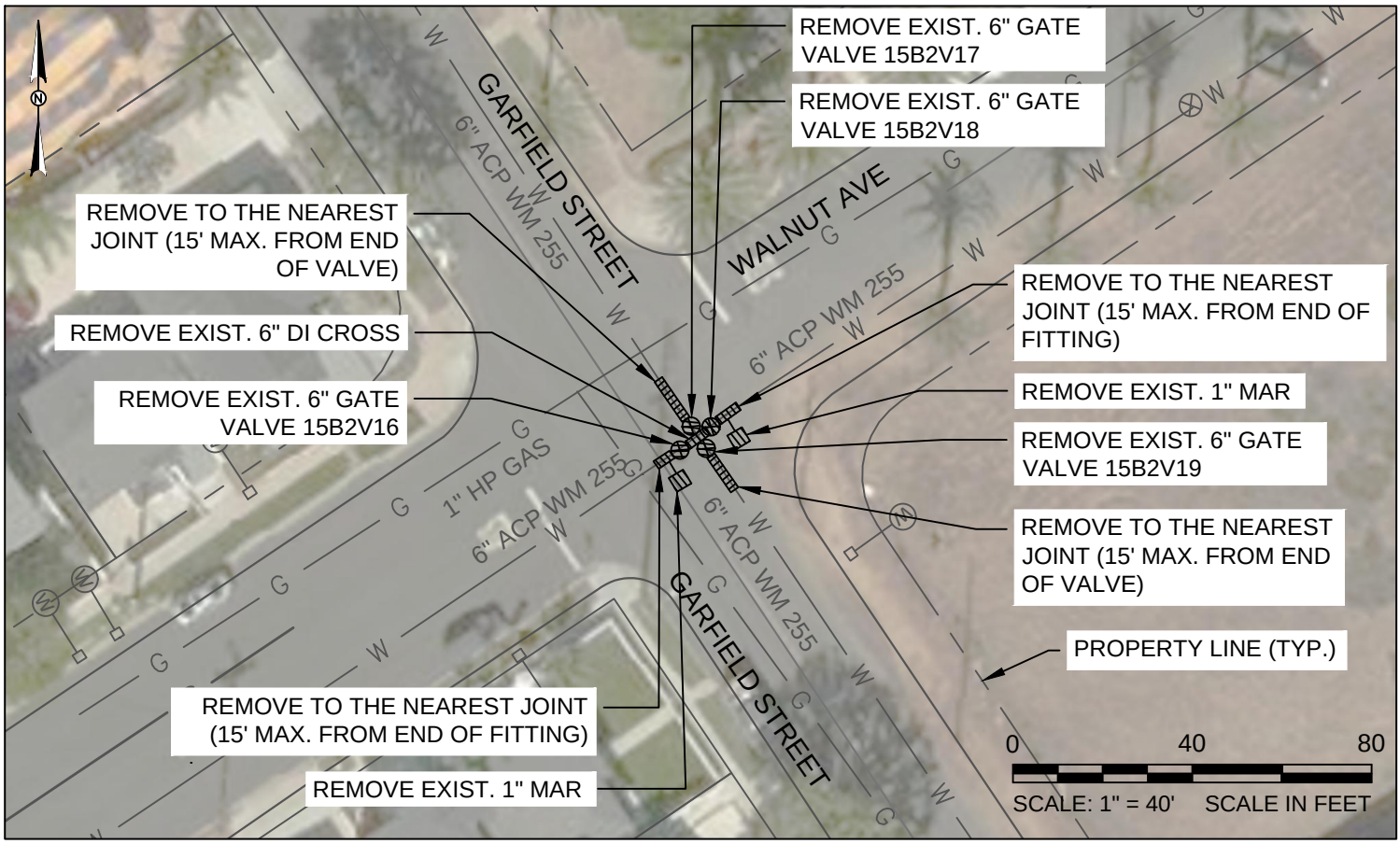

PLAN

SCALE: 1" = 40'

NOTE:

1. AERIAL UTILITIES NOT SHOWN FOR CLARITY
2. ASSUME EXISTING PAVEMENT TO BE 4" AC PAVEMENT WITH 12" OF CLASS II AGGREGATE BASE.

PHOTO 1 - FROM EAST

C-2A

REVIEWED BY:		RECORD DRAWING
INSPECTOR		DATE
THIS RECORD DRAWING HAS BEEN PREPARED, IN PART, BASED ON INFORMATION PROVIDED BY OTHERS. TO THE BEST KNOWLEDGE OF THE INSPECTOR INFORMATION PROVIDED IS REASONABLY ACCURATE.	DRAWING NO. XXX-X	DWN BY: CPR CHKD BY: BW RVWD BY: KH/EM
KLEINFELDER Bright People. Right Solutions.	SHEET 8 OF 48	PROJECT NO. 5019-E

CITY OF CARLSBAD
ENGINEERING DEPARTMENT

RECORD PLANS FOR:
CMWD VALVE REPLACEMENT PHASE II

SITE NO.:2 – EXISTING

ACCEPTED BY:
DISTRICT ENGINEER
DATE 6/4/2020

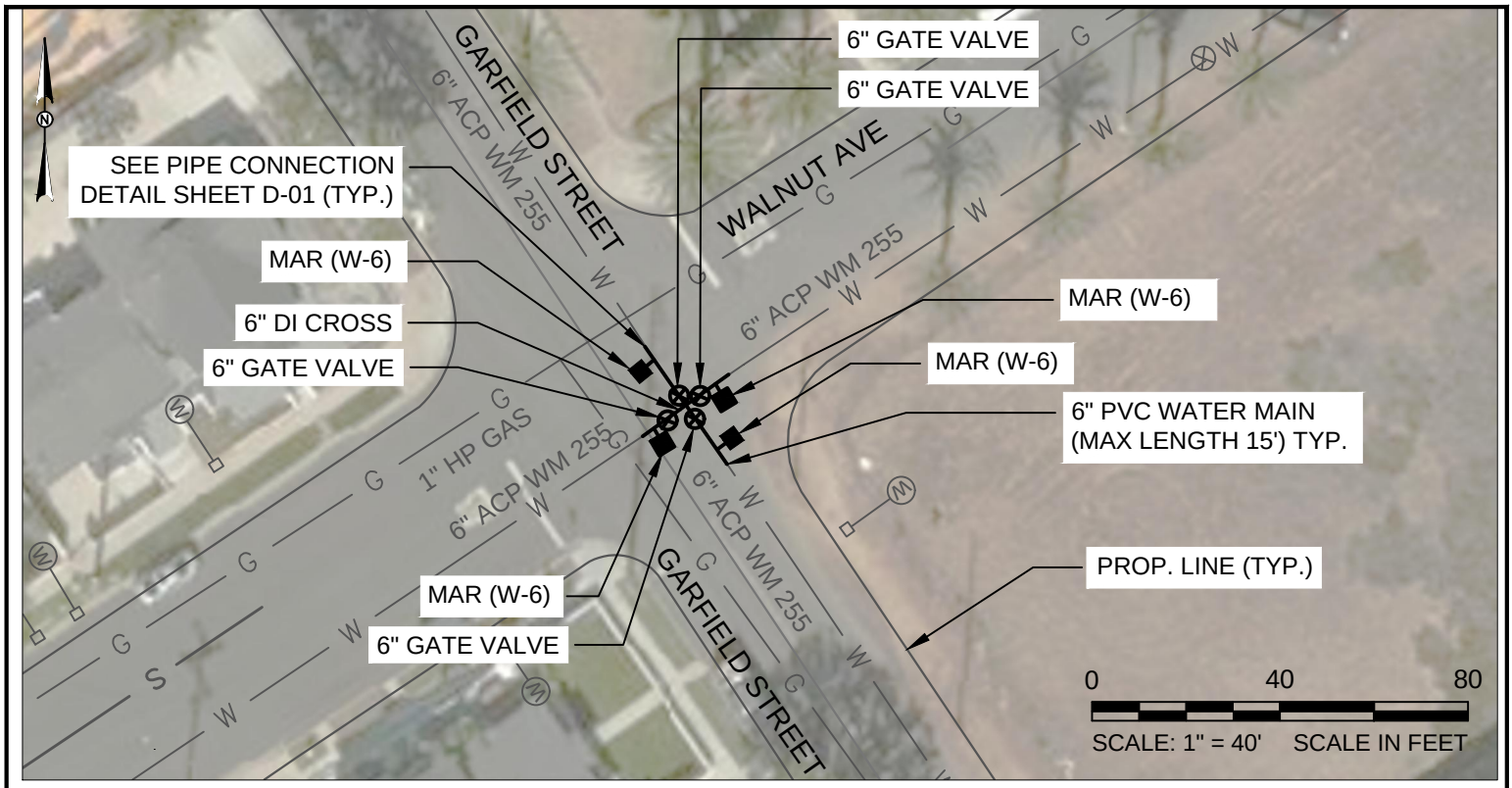

NOTE:

1. AERIAL UTILITIES NOT SHOWN FOR CLARITY
2. SEE CMWD STD. DWGS GS 24 - GS 28 FOR TRENCH DETAILS

PLAN

SCALE: 1" = 40'

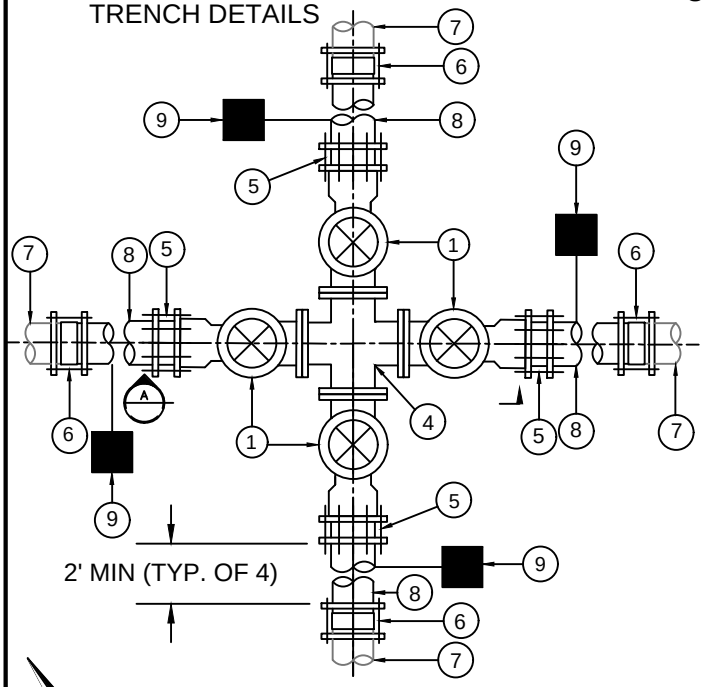

VALVE RELOCATION PLAN
N.T.S.

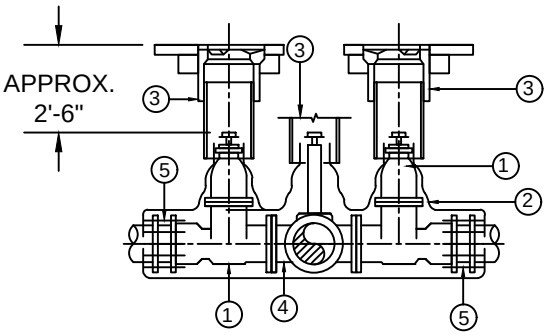

VALVE RELOCATION (SECTION A)

ITEM	DESCRIPTION
1	GATE VALVE FLG x MJ (W-16)
2	POLYETHYLENE ENCASEMENT
3	VALVE BOX ASSEMBLY(W-13)
4	DI CROSS FLG x FLG
5	RESTRAINED MECHANICAL JOINT FITTING
6	PVC TO AC TRANSITION COUPLING
7	EXISTING AC PIPE
8	C900 PVC PIPE (W-2)
9	MANUAL AIR RELEASE VALVE (W-6)

C-2B

REVIEWED BY: RECORD DRAWING

INSPECTOR DATE

THIS RECORD DRAWING HAS BEEN PREPARED, IN PART, BASED ON INFORMATION PROVIDED BY OTHERS. TO THE BEST KNOWLEDGE OF THE INSPECTOR INFORMATION PROVIDED IS REASONABLY ACCURATE.

DRAWING NO. XXX-X

DWN BY: CPR
CHKD BY: BW
RVWD BY: KH/EM

KLEINFELDER Bright People. Right Solutions.

SHEET 9 OF 48

PROJECT NO. 5019-E

CITY OF CARLSBAD
ENGINEERING DEPARTMENT

RECORD PLANS FOR:
CMWD VALVE REPLACEMENT PHASE II

SITE NO.:2 - PROPOSED

ACCEPTED BY:
DISTRICT ENGINEER DATE 6/4/2020

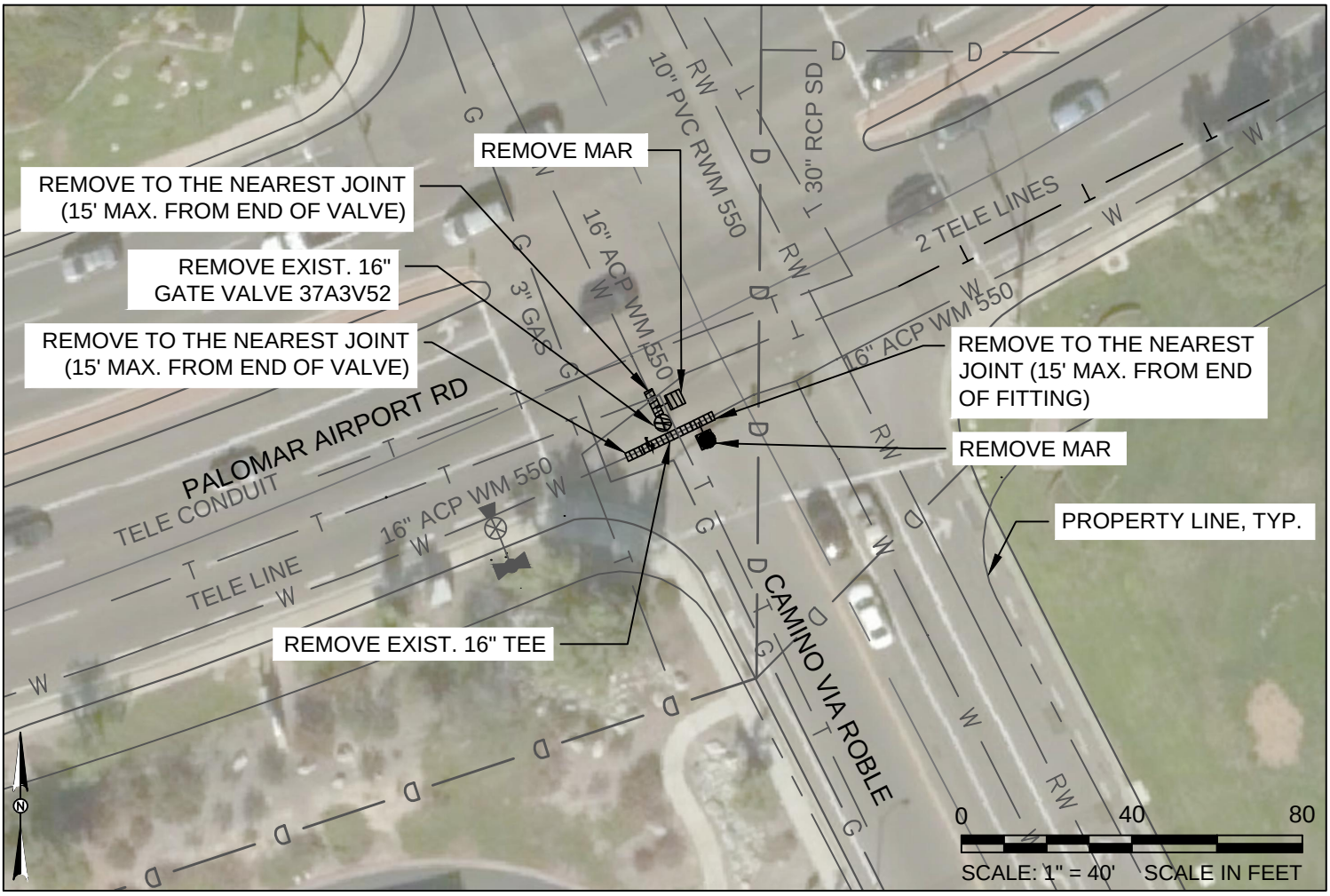

NOTE:

1. ASSUME EXISTING PAVEMENT TO BE 4" AC PAVEMENT WITH 12" OF CLASS II AGGREGATE BASE.

PLAN

SCALE: 1" = 40'

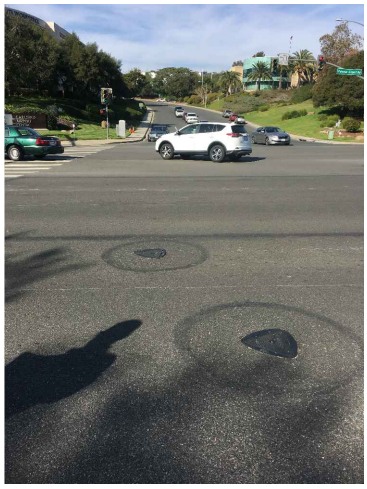

PHOTO 1 - FROM SOUTH

C-3A

REVIEWED BY: INSPECTOR	RECORD DRAWING DATE	CITY OF CARLSBAD ENGINEERING DEPARTMENT
THIS RECORD DRAWING HAS BEEN PREPARED, IN PART, BASED ON INFORMATION PROVIDED BY OTHERS. TO THE BEST KNOWLEDGE OF THE INSPECTOR INFORMATION PROVIDED IS REASONABLY ACCURATE.	DRAWING NO. XXX-X	DWN BY: CPR CHKD BY: BW RVWD BY: KH/EM
KLEINFELDER Bright People. Right Solutions.	SHEET 10 OF 48	PROJECT NO. 5019-E

RECORD PLANS FOR:
CMWD VALVE REPLACEMENT PHASE II

SITE NO.:3 - EXISTING

ACCEPTED BY:
DISTRICT ENGINEER — DATE 6/4/2020

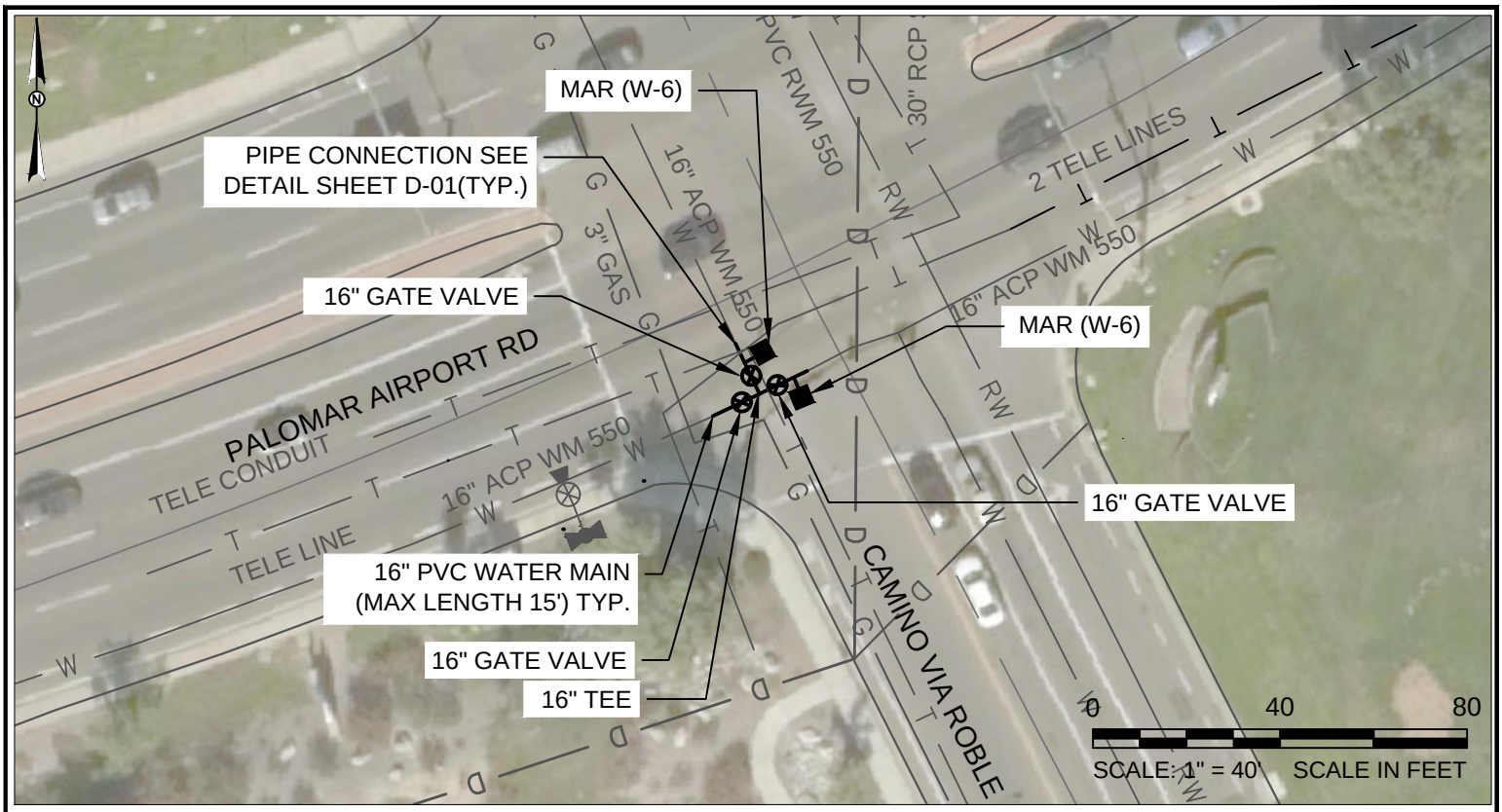

NOTE:

1. SEE CMWD STD. DWGS GS 24 - GS 28 FOR TRENCH DETAILS.

PLAN

SCALE: 1" = 40'

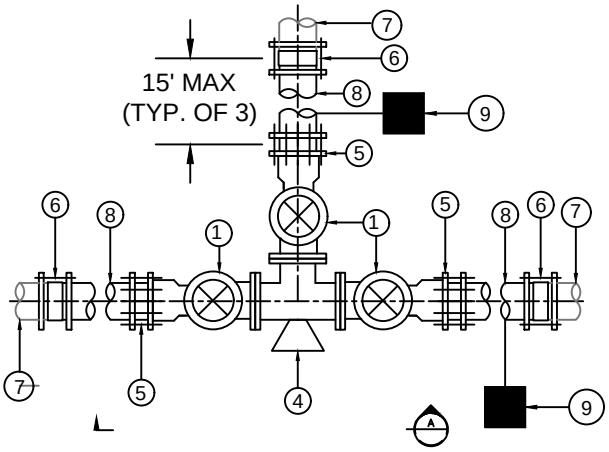

VALVE RELOCATION (PLAN)

N.T.S

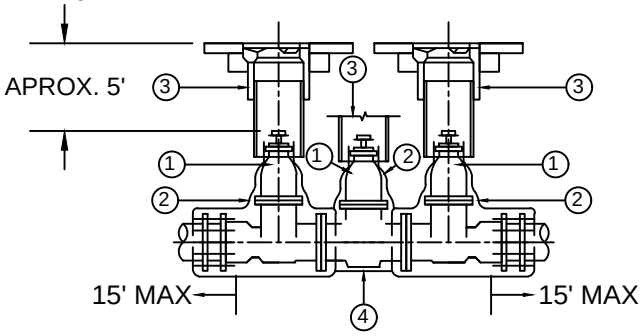

VALVE RELOCATION (SECTION A)

N.T.S

ITEM	DESCRIPTION
1	GATE VALVE FLG x MJ (W-16)
2	POLYETHYLENE ENCASEMENT
3	VALVE BOX ASSEMBLY(W-13)
4	DI TEE FLG x FLG AND THRUST BLOCK (W-15)
5	RESTRAINED MECHANICAL JOINT FITTING
6	PVC TO AC TRANSITION COUPLING
7	EXISTING AC PIPE
8	C900 PVC PIPE (W-2)
9	MANUAL AIR RELEASE VALVE (W-6)

C–3B

REVIEWED BY: RECORD DRAWING

INSPECTOR DATE

THIS RECORD DRAWING HAS BEEN PREPARED, IN PART, BASED ON INFORMATION PROVIDED BY OTHERS. TO THE BEST KNOWLEDGE OF THE INSPECTOR INFORMATION PROVIDED IS REASONABLY ACCURATE.

DRAWING NO. XXX–X

DWN BY: CPR
CHKD BY: BW
RVWD BY: KH/EM

KLEINFELDER Bright People. Right Solutions.

SHEET 11 OF 48

PROJECT NO. 5019–E

CITY OF CARLSBAD
ENGINEERING DEPARTMENT

RECORD PLANS FOR:
CMWD VALVE REPLACEMENT PHASE II

SITE NO.:3 – PROPOSED

ACCEPTED BY:
DISTRICT ENGINEER

6/4/2020
DATE

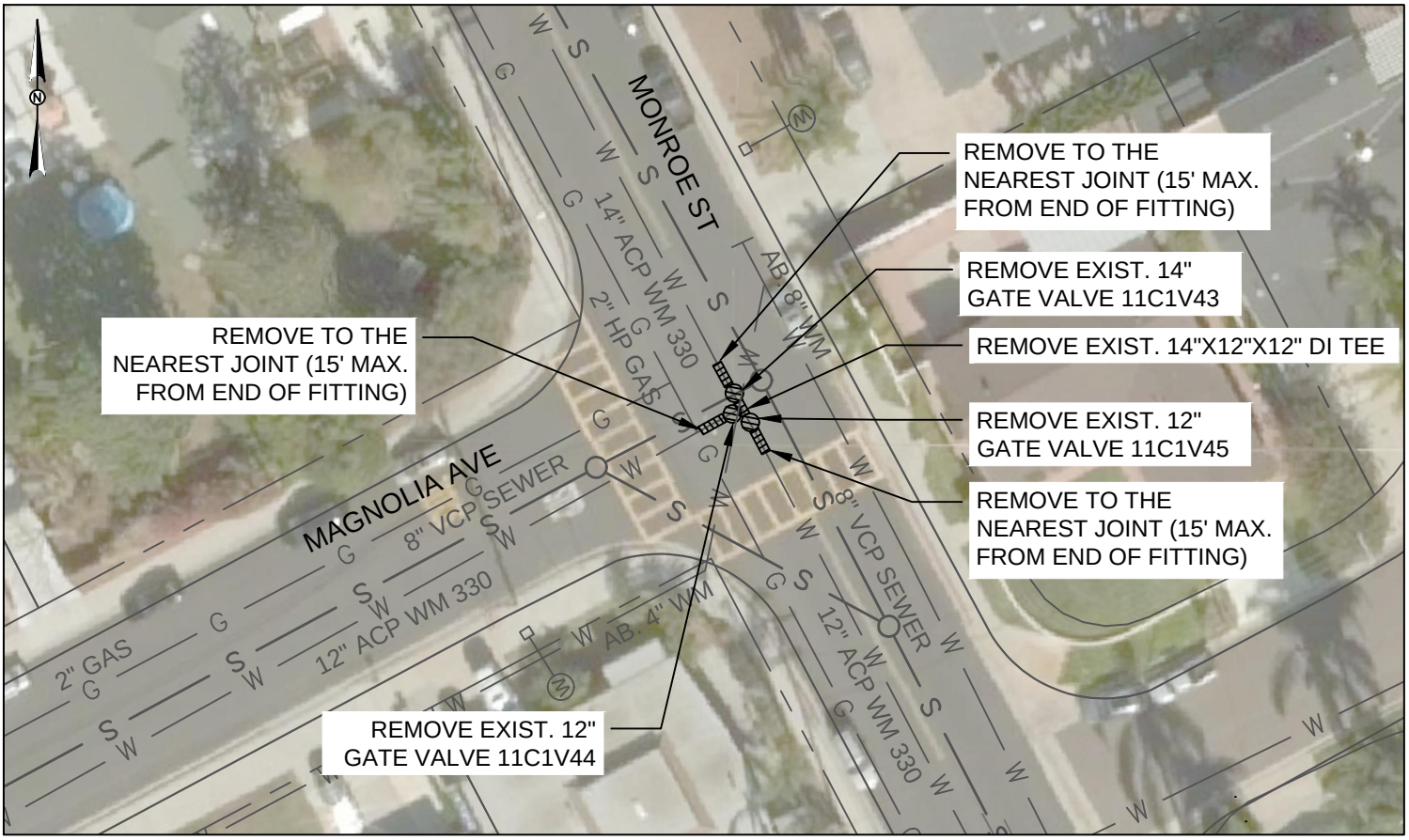

NOTE:

1. ASSUME EXISTING PAVEMENT TO BE 4" AC PAVEMENT WITH 12" OF CLASS II AGGREGATE BASE.

PLAN

SCALE: 1" = 40'

0 40 80

SCALE: 1" = 40' SCALE IN FEET

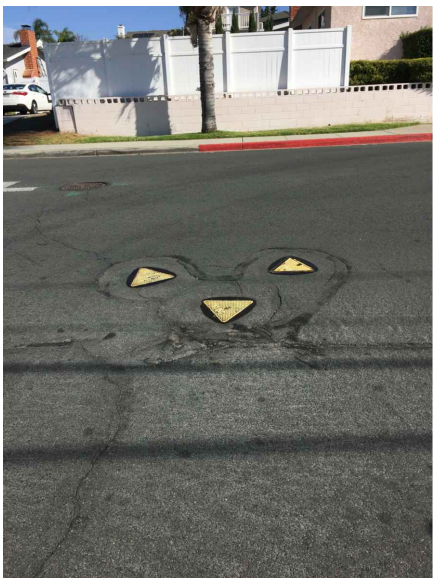

PHOTO 1 - FROM WEST

C-4A

REVIEWED BY: RECORD DRAWING INSPECTOR DATE		CITY OF CARLSBAD ENGINEERING DEPARTMENT
THIS RECORD DRAWING HAS BEEN PREPARED, IN PART, BASED ON INFORMATION PROVIDED BY OTHERS. TO THE BEST KNOWLEDGE OF THE INSPECTOR INFORMATION PROVIDED IS REASONABLY ACCURATE.	DRAWING NO. XXX-X	DWN BY: CPR CHKD BY: BW RVWD BY: KH/EM
KLEINFELDER Bright People. Right Solutions.	SHEET 12 OF 48	PROJECT NO. 5019-E

RECORD PLANS FOR:

CMWD VALVE REPLACEMENT PHASE II

SITE NO.:4 - EXISTING

ACCEPTED BY:

DISTRICT ENGINEER DATE 6/4/2020

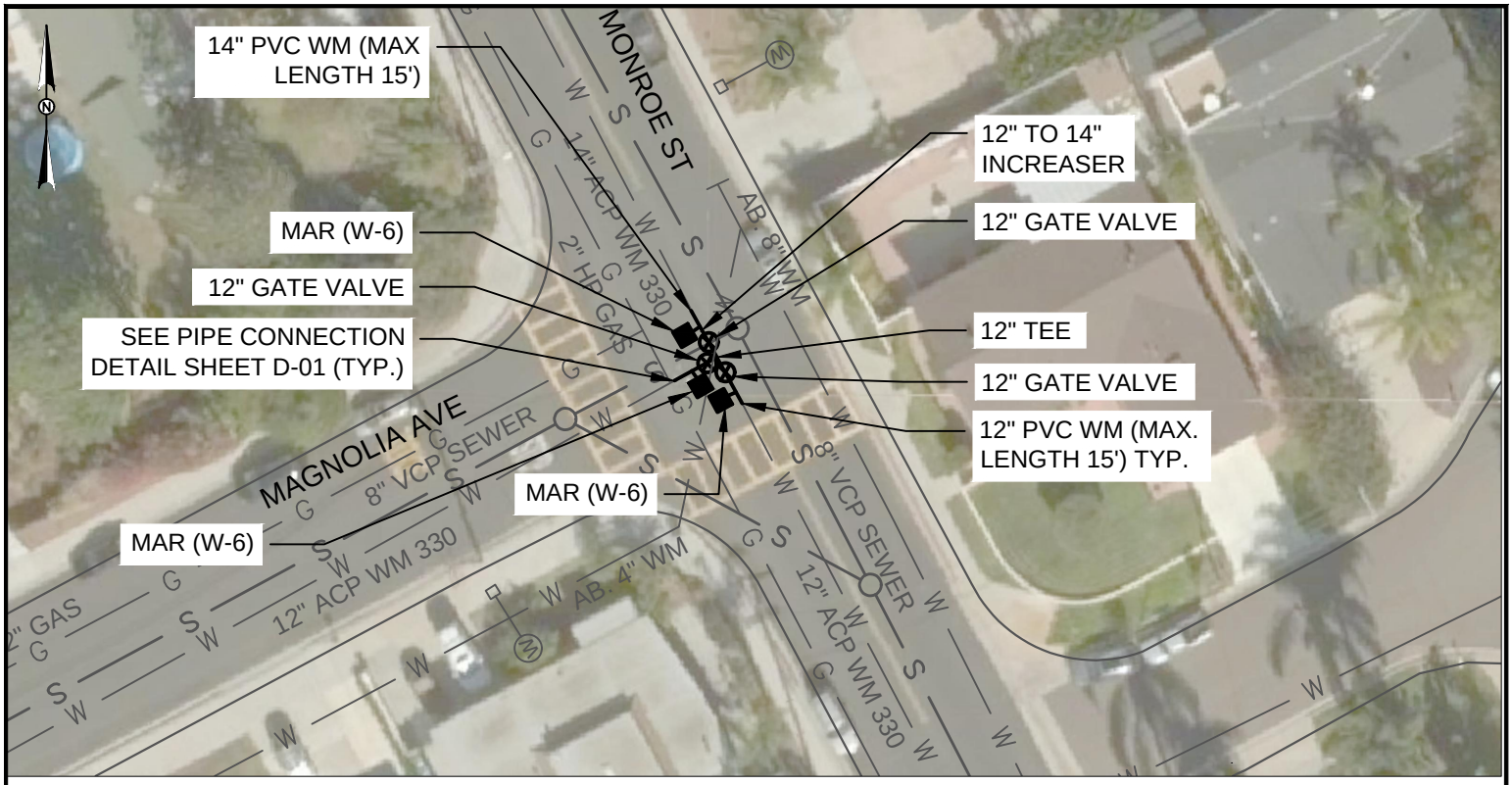

NOTE:
1. OVERHEAD UTILITIES NOT SHOWN FOR CLARITY.
2. SEE CMWD STD. DWGS GS 24 - GS 28 FOR TRENCH DETAILS.

PLAN

SCALE: 1" = 40'

0 40 80

SCALE: 1" = 40' SCALE IN FEET

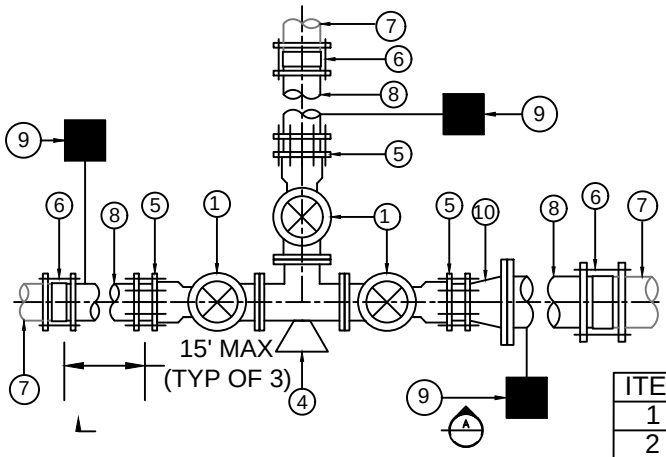

VALVE RELOCATION (PLAN)

N.T.S

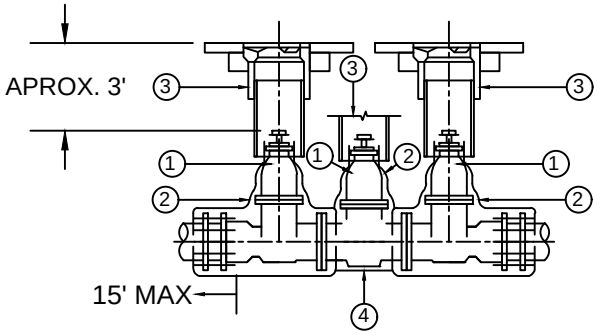

VALVE RELOCATION (SECTION A)

N.T.S

ITEM	DESCRIPTION
1	GATE VALVE FLG x MJ (W-16)
2	POLYETHYLENE ENCASEMENT
3	VALVE BOX ASSEMBLY(W-13)
4	DI TEE FLG x FLG AND THRUST BLOCK (W-15)
5	RESTRAINED MECHANICAL JOINT FITTING
6	PVC TO AC TRANSITION COUPLING
7	EXISTING AC PIPE
8	C900 PVC PIPE (W-2)
9	MANUAL AIR RELEASE VALVE (W-6)
10	12" x 14" DI INCREASER MJ X FLG

C-4B

REVIEWED BY: RECORD DRAWING

INSPECTOR DATE

THIS RECORD DRAWING HAS BEEN PREPARED, IN PART, BASED ON INFORMATION PROVIDED BY OTHERS. TO THE BEST KNOWLEDGE OF THE INSPECTOR INFORMATION PROVIDED IS REASONABLY ACCURATE.

DRAWING NO. XXX-X

DWN BY: CPR
CHKD BY: BW
RVWD BY: KH/EM

KLEINFELDER Bright People. Right Solutions.

SHEET 13 OF 48

PROJECT NO. 5019-E

CITY OF CARLSBAD
ENGINEERING DEPARTMENT

RECORD PLANS FOR:
CMWD VALVE REPLACEMENT PHASE II

SITE NO.:4 - PROPOSED

ACCEPTED BY:
DISTRICT ENGINEER

6/4/2020
DATE

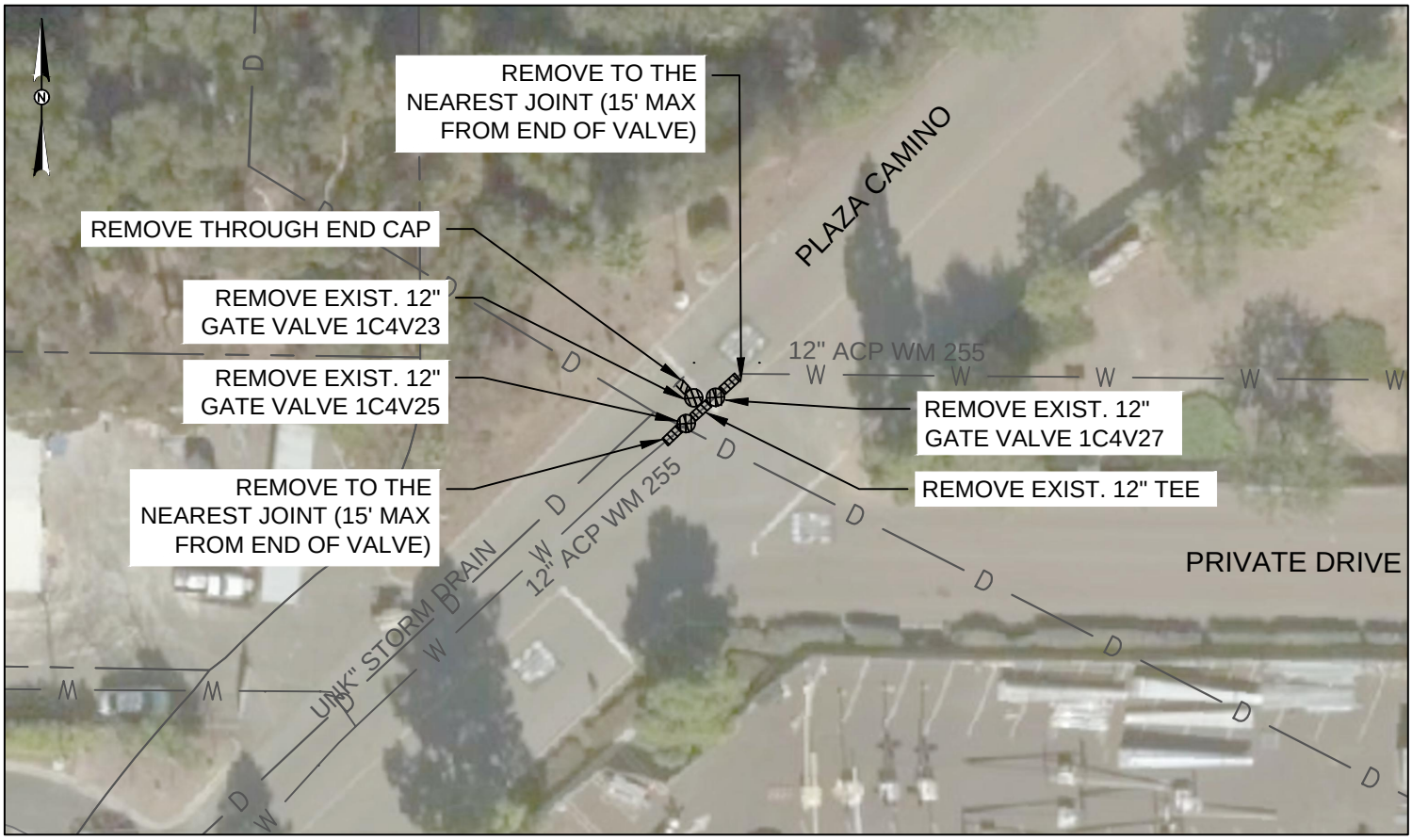

NOTE:

1. ASSUME EXISTING PAVEMENT TO BE 4" AC PAVEMENT WITH 12" OF CLASS II AGGREGATE BASE.

PLAN

SCALE: 1" = 40'

0 40 80

SCALE: 1" = 40' SCALE IN FEET

PHOTO 1 - FROM SOUTH

C–5A

REVIEWED BY:		RECORD DRAWING
INSPECTOR		DATE
THIS RECORD DRAWING HAS BEEN PREPARED, IN PART, BASED ON INFORMATION PROVIDED BY OTHERS. TO THE BEST KNOWLEDGE OF THE INSPECTOR INFORMATION PROVIDED IS REASONABLY ACCURATE.	DRAWING NO. XXX–X	DWN BY: CPR CHKD BY: BW RVWD BY: KH/EM
KLEINFELDER Bright People. Right Solutions.	SHEET 14 OF 48	PROJECT NO. 5019–E

CITY OF CARLSBAD
ENGINEERING DEPARTMENT

RECORD PLANS FOR:
CMWD VALVE REPLACEMENT PHASE II

SITE NO.:5 – EXISTING

ACCEPTED BY:
DISTRICT ENGINEER — DATE: 6/4/2020

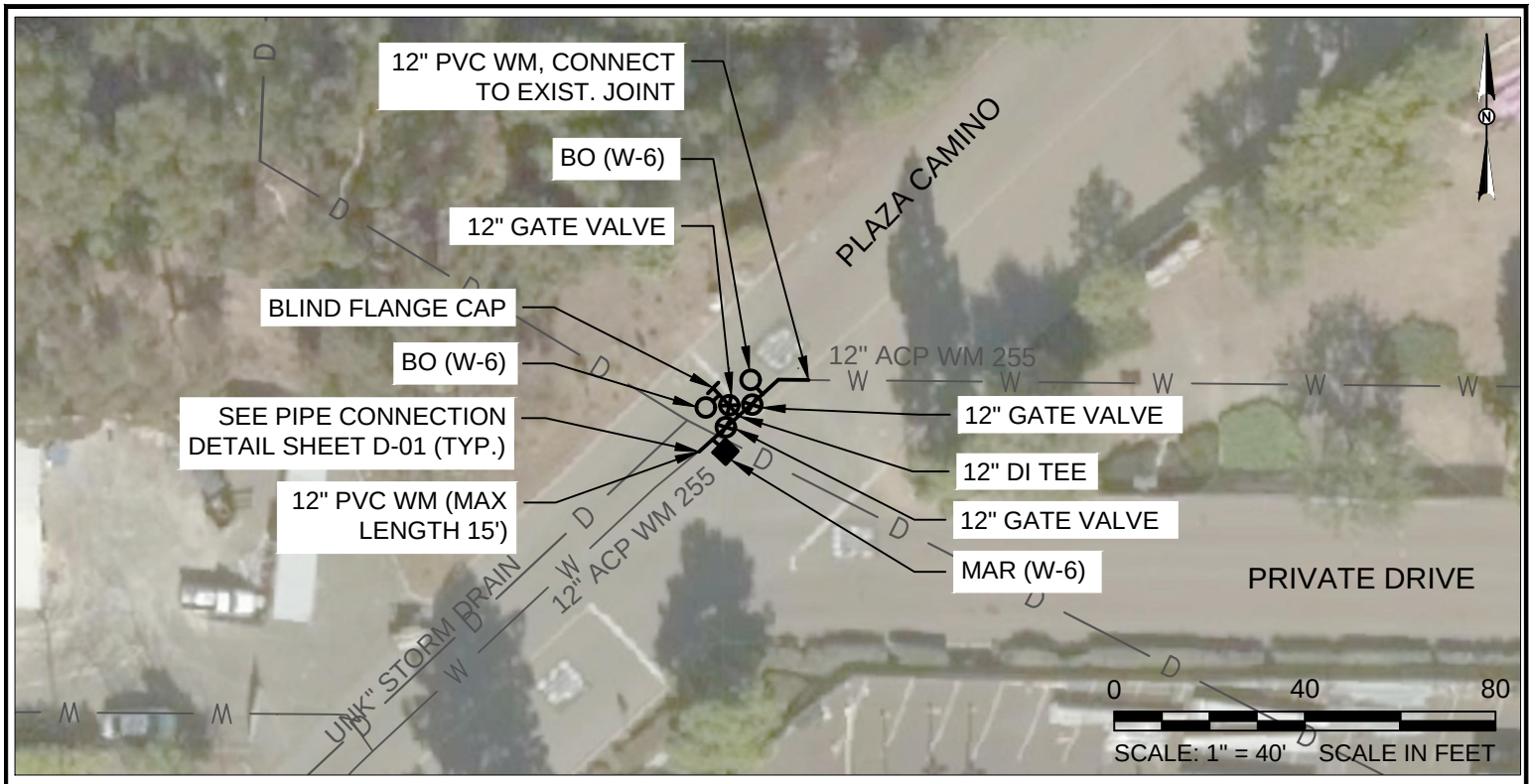

NOTE:

1. SEE CMWD STD. DWGS GS 24 - GS 28 FOR TRENCH DETAILS.

PLAN

SCALE: 1" = 40'

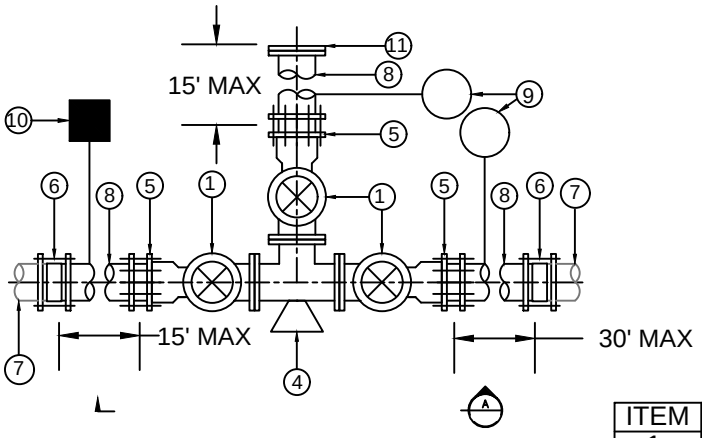

VALVE RELOCATION (PLAN)

N.T.S

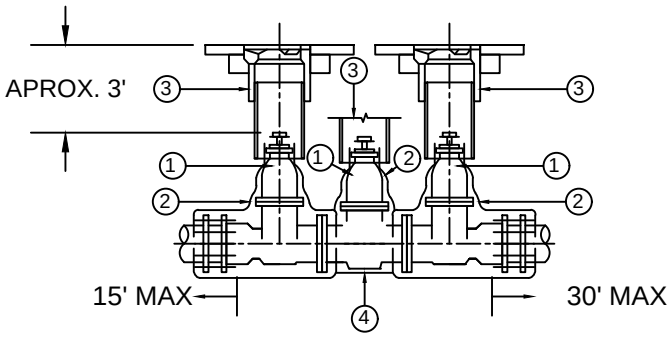

VALVE RELOCATION (SECTION A)

N.T.S

ITEM	DESCRIPTION
1	GATE VALVE FLG x MJ (W-16)
2	POLYETHYLENE ENCASEMENT
3	VALVE BOX ASSEMBLY(W-13)
4	DI TEE FLG x FLG AND THRUST BLOCK (W-15)
5	RESTRAINED MECHANICAL JOINT FITTING
6	PVC TO AC TRANSITION COUPLING
7	EXISTING AC PIPE
8	C900 PVC PIPE (W-2)
9	BLOW-OFF (W-6)
10	MANUAL AIR RELEASE VALVE (W-6)
11	BLIND FLANGE CAP

C–5B

REVIEWED BY: RECORD DRAWING

INSPECTOR DATE

THIS RECORD DRAWING HAS BEEN PREPARED, IN PART, BASED ON INFORMATION PROVIDED BY OTHERS. TO THE BEST KNOWLEDGE OF THE INSPECTOR INFORMATION PROVIDED IS REASONABLY ACCURATE.

DRAWING NO. XXX–X

DWN BY: CPR
CHKD BY: BW
RVWD BY: KH/EM

KLEINFELDER Bright People. Right Solutions.

SHEET 15 OF 48

PROJECT NO. 5019–E

CITY OF CARLSBAD
ENGINEERING DEPARTMENT

RECORD PLANS FOR:
CMWD VALVE REPLACEMENT PHASE II

SITE NO.:5 – PROPOSED

ACCEPTED BY:
DISTRICT ENGINEER

6/4/2020
DATE

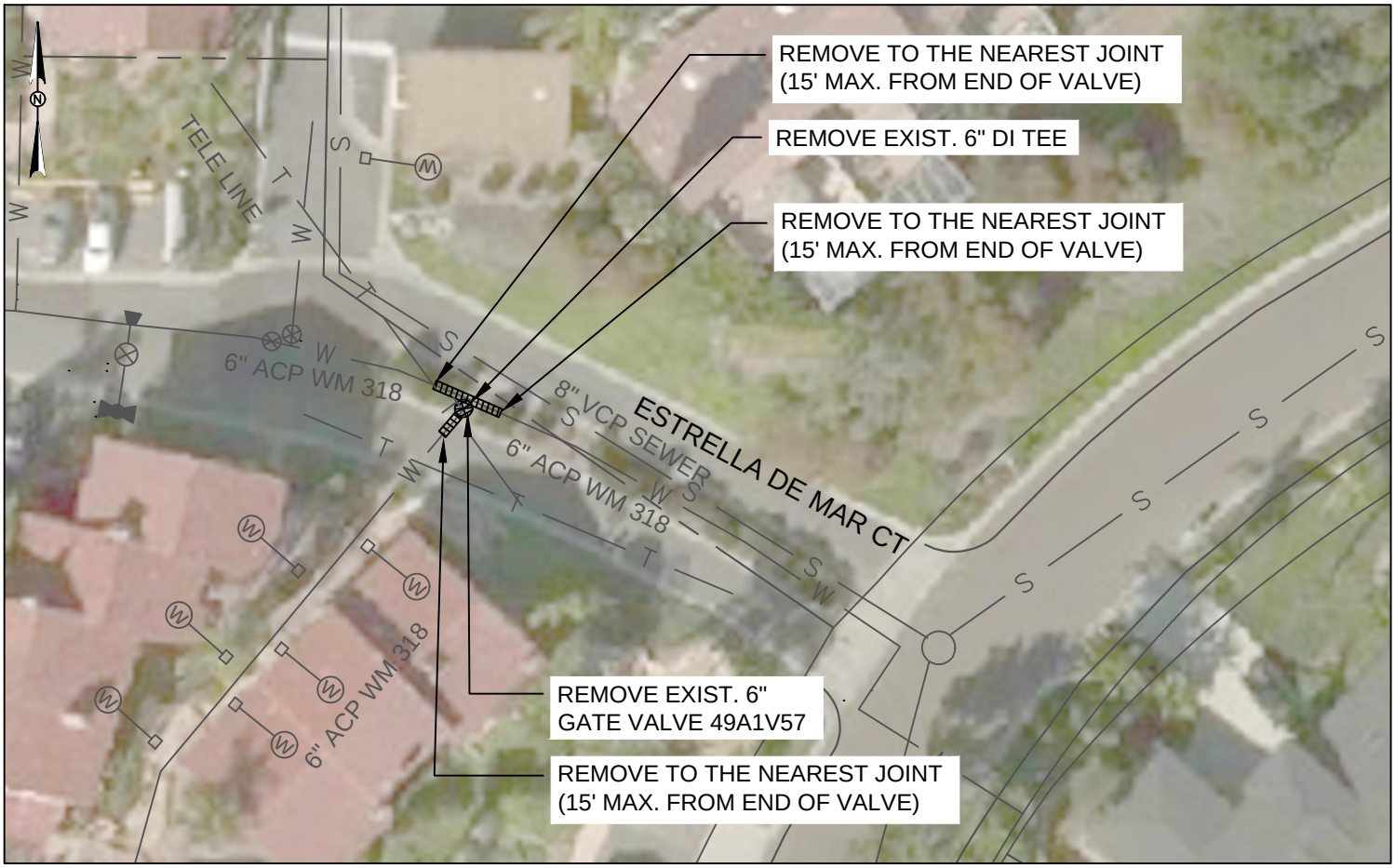

NOTE:

1. ASSUME EXISTING PAVEMENT TO BE 4" AC PAVEMENT WITH 12" OF CLASS II AGGREGATE BASE.

PLAN

SCALE: 1" = 40'

0 40 80

SCALE: 1" = 40' SCALE IN FEET

PHOTO 1 - FROM SOUTH WEST

C-6A

REVIEWED BY: RECORD DRAWING		
INSPECTOR DATE		
THIS RECORD DRAWING HAS BEEN PREPARED, IN PART, BASED ON INFORMATION PROVIDED BY OTHERS. TO THE BEST KNOWLEDGE OF THE INSPECTOR INFORMATION PROVIDED IS REASONABLY ACCURATE.	DRAWING NO. XXX-X	DWN BY: CPR CHKD BY: BW RVWD BY: KH/EM
KLEINFELDER Bright People. Right Solutions.	SHEET 16 OF 48	PROJECT NO. 5019-E

CITY OF CARLSBAD
ENGINEERING DEPARTMENT

RECORD PLANS FOR:
CMWD VALVE REPLACEMENT PHASE II

SITE NO.:6 – EXISTING

ACCEPTED BY:
DISTRICT ENGINEER
6/4/2020
DATE

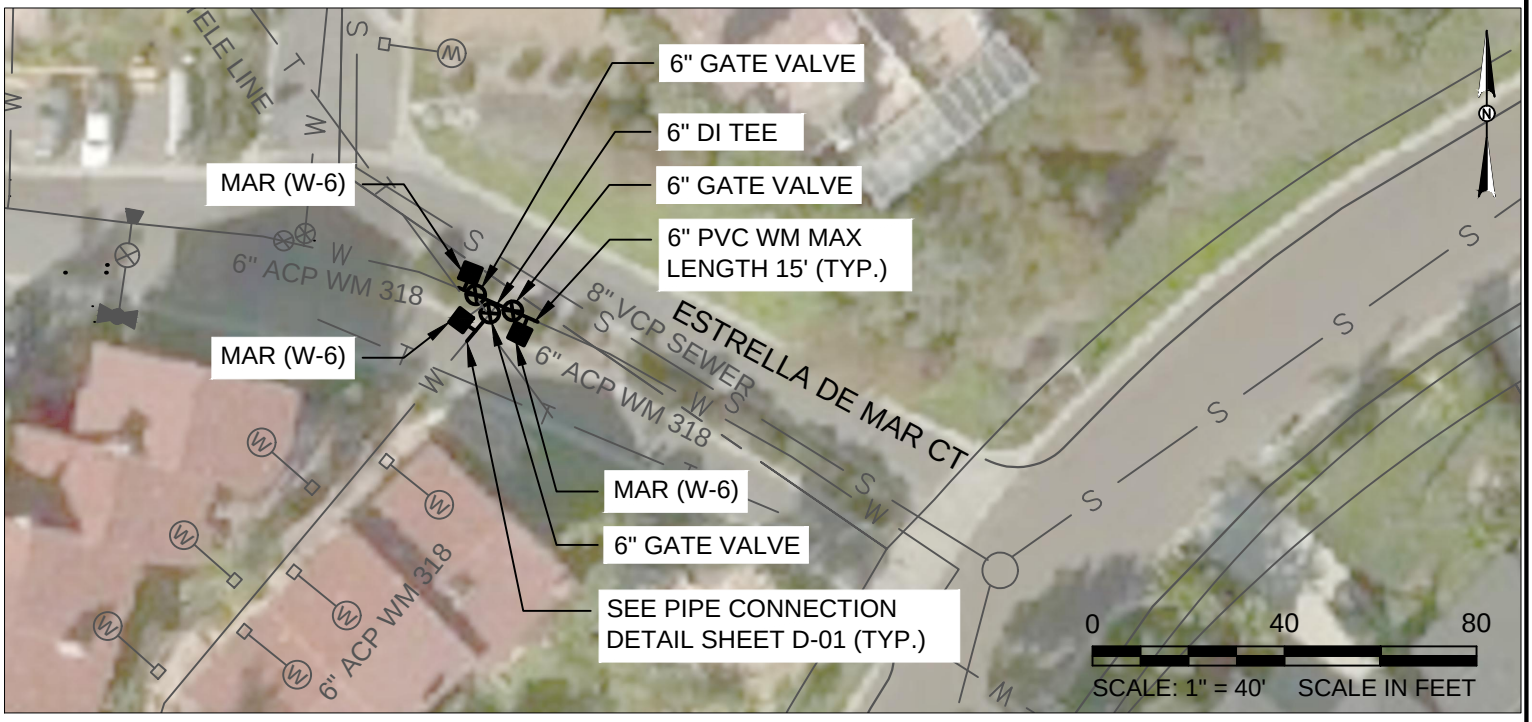

NOTE:

1. SEE CMWD STD. DWGS GS 24 - GS 28 FOR TRENCH REPAIR DETAILS.

PLAN

SCALE: 1" = 40'

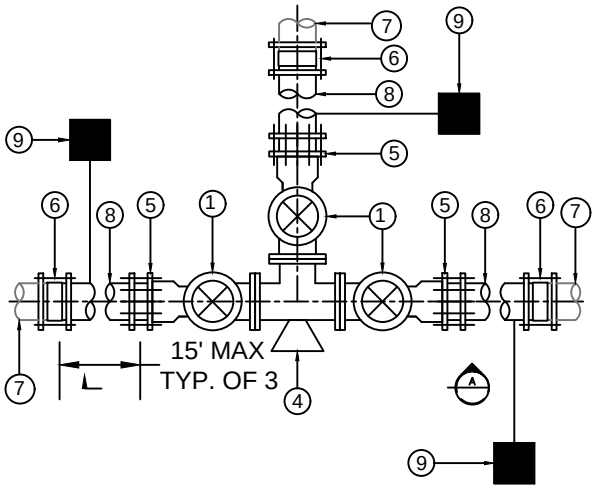

VALVE RELOCATION (PLAN)

N.T.S

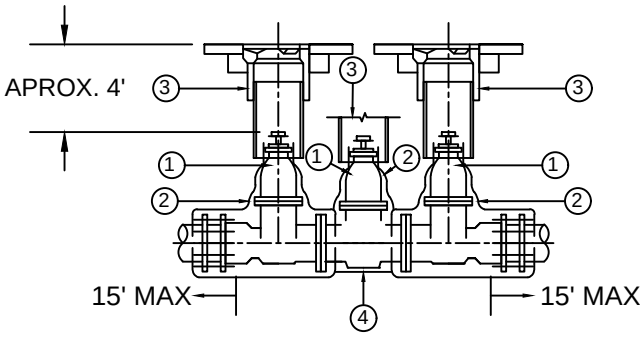

VALVE RELOCATION (SECTION A)

N.T.S

ITEM	DESCRIPTION
1	GATE VALVE FLG x MJ (W-16)
2	POLYETHYLENE ENCASEMENT
3	VALVE BOX ASSEMBLY(W-13)
4	DI TEE FLG x FLG AND THRUST BLOCK (W-15)
5	RESTRAINED MECHANICAL JOINT FITTING
6	PVC TO AC TRANSITION COUPLING
7	EXISTING AC PIPE
8	C900 PVC PIPE (W-2)
9	MANUAL AIR RELEASE VALVE (W-6)

C–6B

REVIEWED BY: RECORD DRAWING

INSPECTOR DATE

THIS RECORD DRAWING HAS BEEN PREPARED, IN PART, BASED ON INFORMATION PROVIDED BY OTHERS. TO THE BEST KNOWLEDGE OF THE INSPECTOR INFORMATION PROVIDED IS REASONABLY ACCURATE.

DRAWING NO. XXX–X

DWN BY: CPR
CHKD BY: BW
RVWD BY: KH/EM

KLEINFELDER Bright People. Right Solutions.

SHEET 17 OF 48

PROJECT NO. 5019–E

CITY OF CARLSBAD
ENGINEERING DEPARTMENT

RECORD PLANS FOR:
CMWD VALVE REPLACEMENT PHASE II

SITE NO.:6 – PROPOSED

ACCEPTED BY:

DISTRICT ENGINEER DATE 6/4/2020

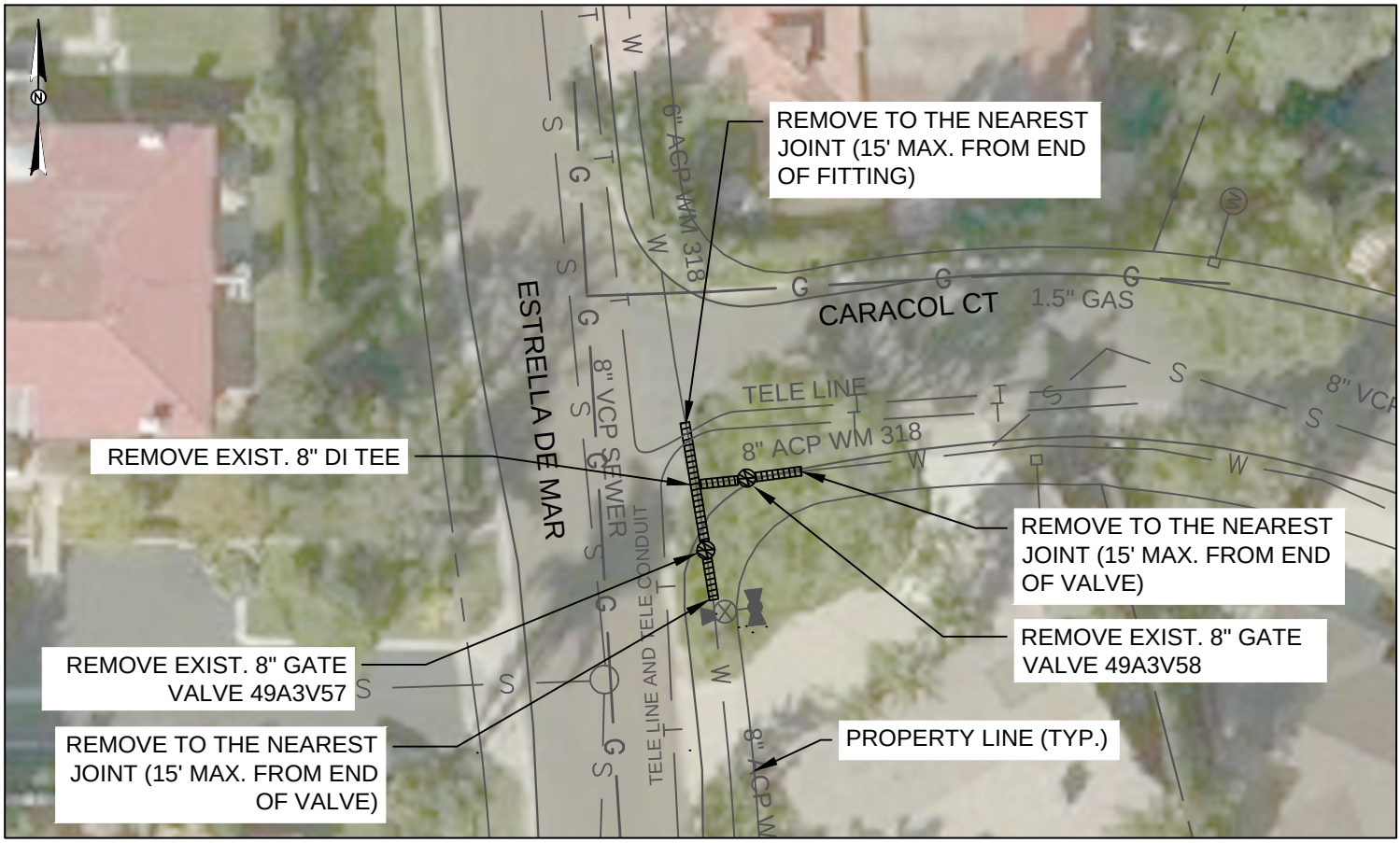

NOTE:

1. ASSUME EXISTING PAVEMENT TO BE 4" AC PAVEMENT WITH 12" OF CLASS II AGGREGATE BASE.

PLAN

SCALE: 1" = 40'

0 40 80

SCALE: 1" = 40' SCALE IN FEET

PHOTO 1 - FROM SOUTH

C-7A

REVIEWED BY: RECORD DRAWING

INSPECTOR DATE

THIS RECORD DRAWING HAS BEEN PREPARED, IN PART, BASED ON INFORMATION PROVIDED BY OTHERS. TO THE BEST KNOWLEDGE OF THE INSPECTOR INFORMATION PROVIDED IS REASONABLY ACCURATE.

DRAWING NO. XXX-X

DWN BY: CPR
CHKD BY: BW
RVWD BY: KH/EM

KLEINFELDER Bright People. Right Solutions.

SHEET 18 OF 48

PROJECT NO. 5019-E

CITY OF CARLSBAD
ENGINEERING DEPARTMENT

RECORD PLANS FOR:
CMWD VALVE REPLACEMENT PHASE II

SITE NO.: 7 - EXISTING

ACCEPTED BY:

DISTRICT ENGINEER DATE 6/4/2020

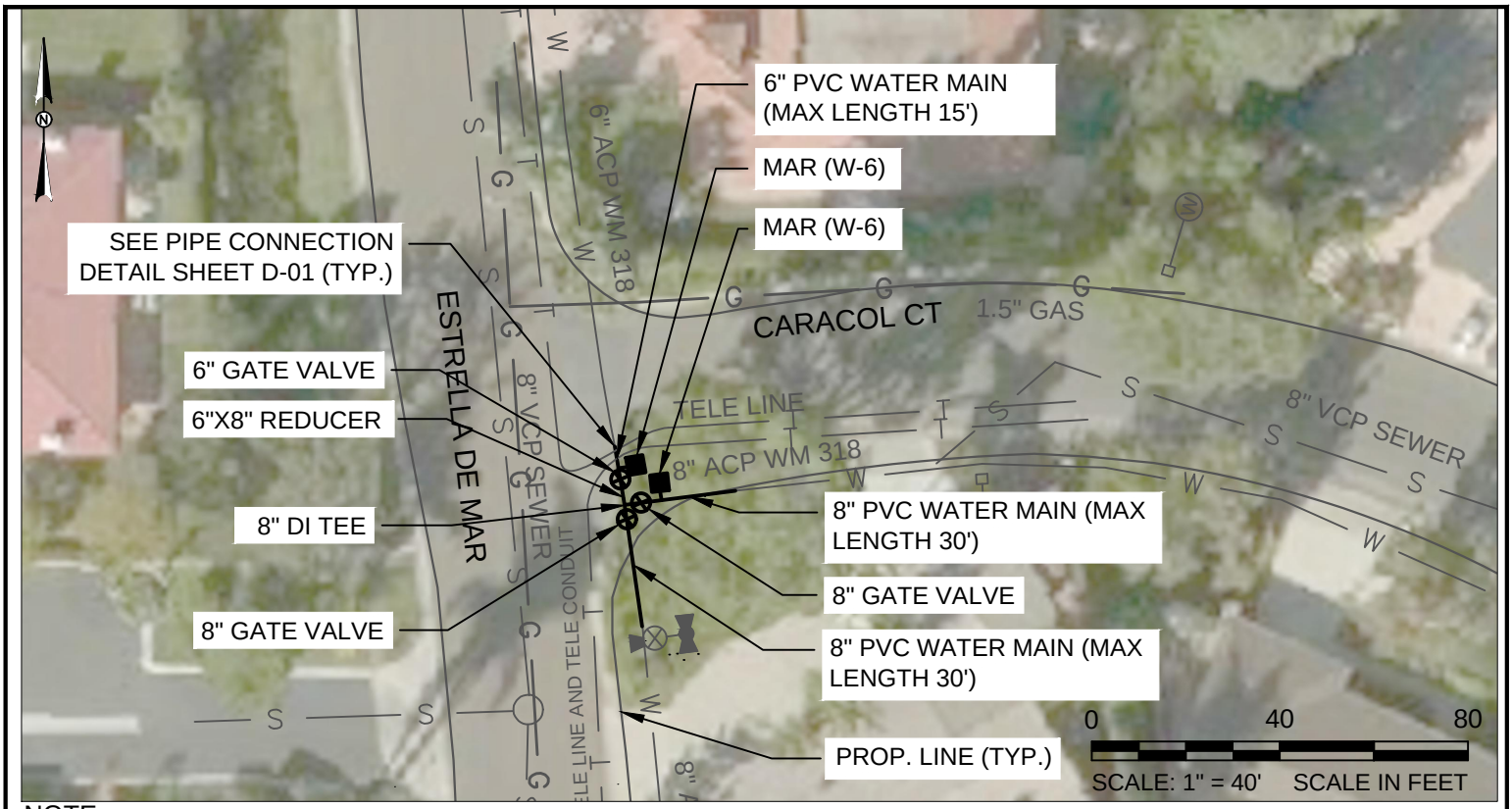

NOTE:

1. SEE CMWD STD. DWGS GS 24 - GS 28 FOR TRENCH REPAIR DETAILS.

PLAN

SCALE: 1" = 40'

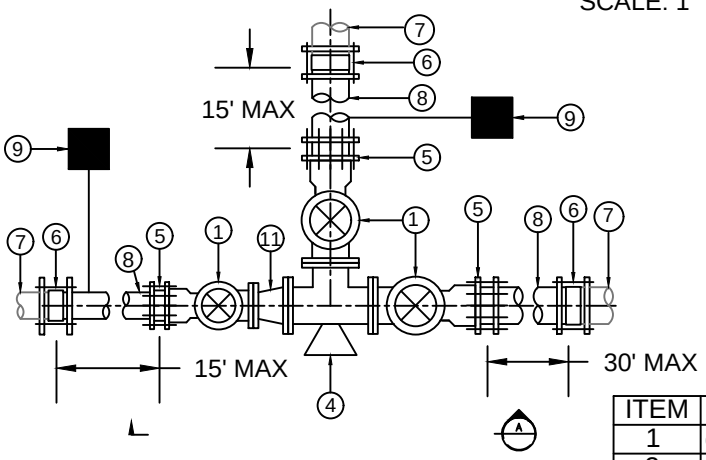

VALVE RELOCATION (PLAN)

N.T.S

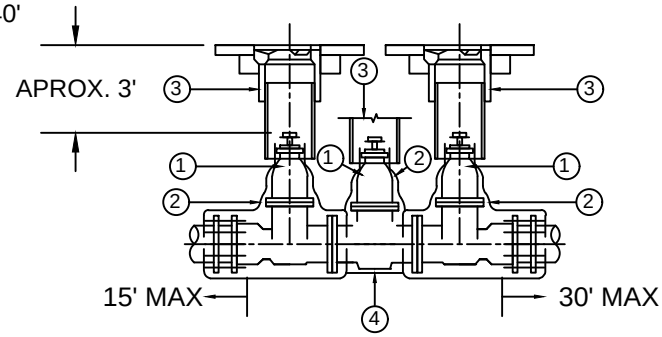

VALVE RELOCATION (SECTION A)

N.T.S

ITEM	DESCRIPTION
1	GATE VALVE FLG x MJ (W-16)
2	POLYETHYLENE ENCASEMENT
3	VALVE BOX ASSEMBLY(W-13)
4	DI TEE FLG x FLG AND THRUST BLOCK (W-15)
5	RESTRAINED MECHANICAL JOINT FITTING
6	PVC TO AC TRANSITION COUPLING
7	EXISTING AC PIPE
8	C900 PVC PIPE (W-2)
9	MANUAL AIR RELEASE VALVE (W-6)
10	6" x 8" DI REDUCER FLG X FLG

C-7B

REVIEWED BY: RECORD DRAWING

INSPECTOR DATE

THIS RECORD DRAWING HAS BEEN PREPARED, IN PART, BASED ON INFORMATION PROVIDED BY OTHERS. TO THE BEST KNOWLEDGE OF THE INSPECTOR INFORMATION PROVIDED IS REASONABLY ACCURATE.

DRAWING NO. XXX-X

DWN BY: CPR
CHKD BY: BW
RVWD BY: KH/EM

KLEINFELDER Bright People. Right Solutions.

SHEET 19 OF 48

PROJECT NO. 5019-E

CITY OF CARLSBAD
ENGINEERING DEPARTMENT

RECORD PLANS FOR:
CMWD VALVE REPLACEMENT PHASE II

SITE NO.:7 - PROPOSED

ACCEPTED BY:
DISTRICT ENGINEER

6/4/2020
DATE

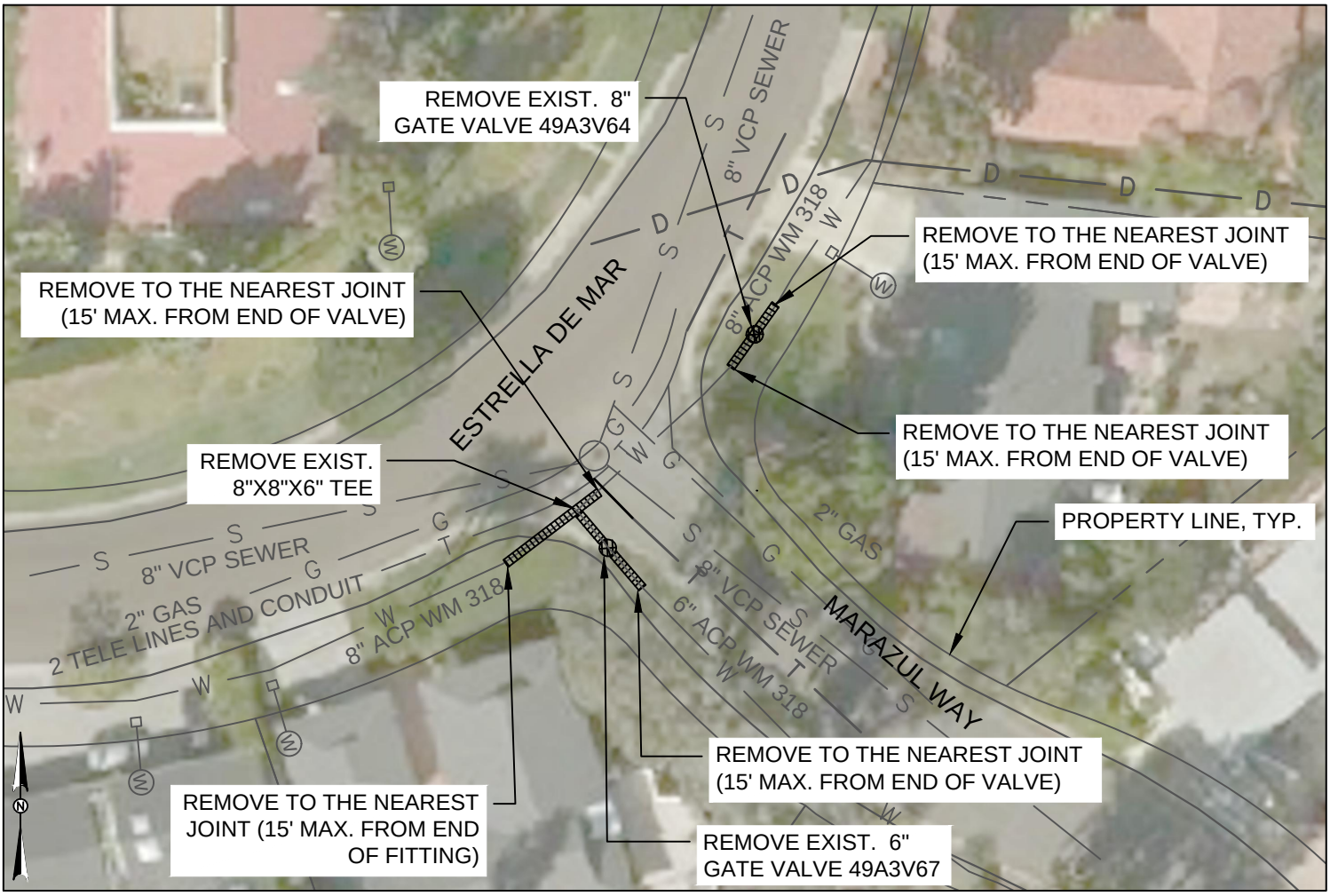

NOTE:

1. ASSUME EXISTING PAVEMENT TO BE 4" AC PAVEMENT WITH 12" OF CLASS II AGGREGATE BASE.

PLAN

SCALE: 1" = 40'

0 40 80

SCALE: 1" = 40' SCALE IN FEET

PHOTO 1 - FROM SOUTH

C-8A

REVIEWED BY: RECORD DRAWING

INSPECTOR DATE

THIS RECORD DRAWING HAS BEEN PREPARED, IN PART, BASED ON INFORMATION PROVIDED BY OTHERS. TO THE BEST KNOWLEDGE OF THE INSPECTOR INFORMATION PROVIDED IS REASONABLY ACCURATE.

DRAWING NO. XXX-X

DWN BY: CPR
CHKD BY: BW
RVWD BY: KH/EM

KLEINFELDER Bright People. Right Solutions.

SHEET 20 OF 48

PROJECT NO. 5019-E

CITY OF CARLSBAD
ENGINEERING DEPARTMENT

RECORD PLANS FOR:
CMWD VALVE REPLACEMENT PHASE II

SITE NO.:8 - EXISTING

ACCEPTED BY:

DISTRICT ENGINEER DATE 6/4/2020

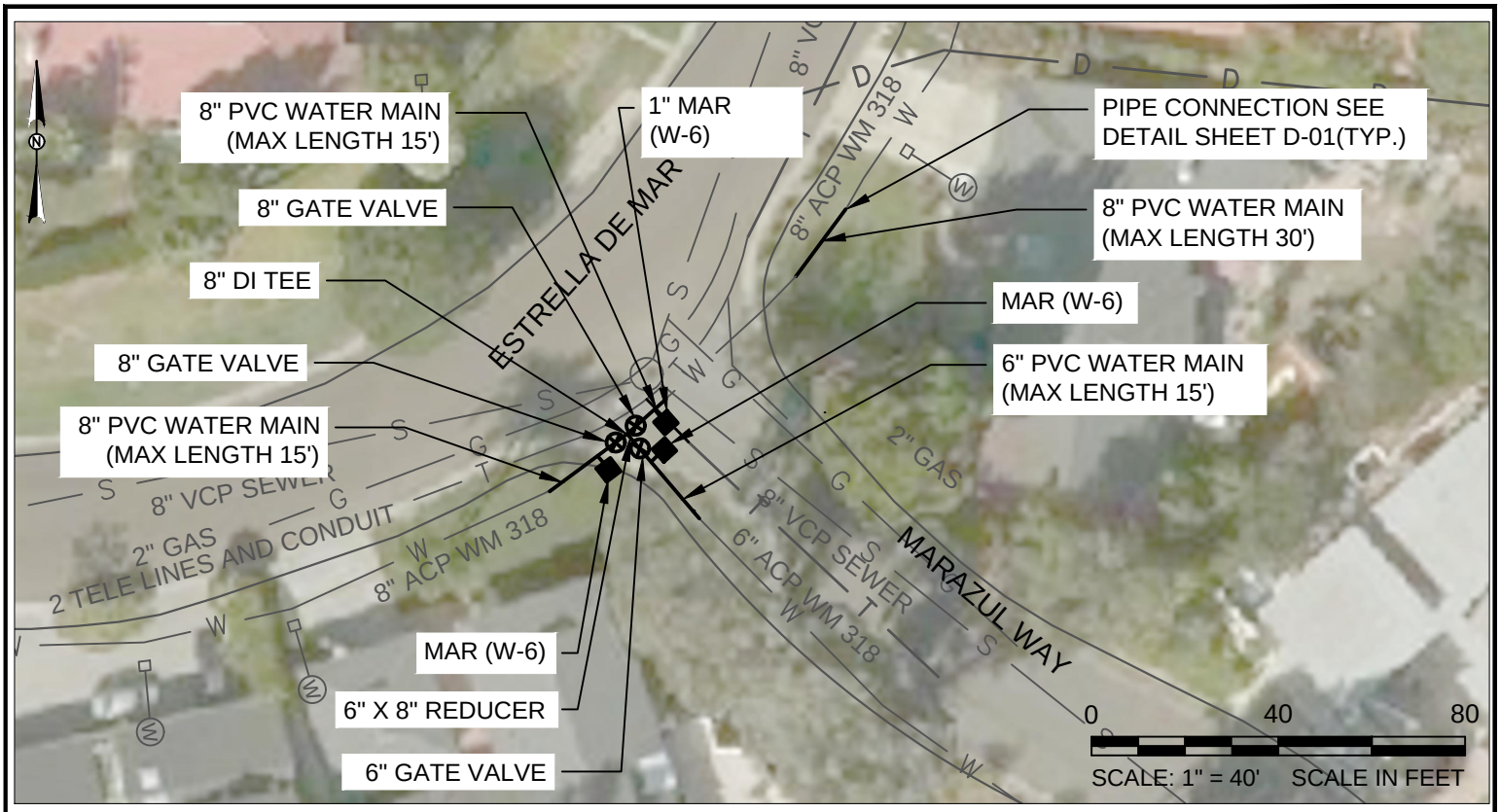

NOTE:

1. SEE CMWD STD. DWGS GS 24 - GS 28 FOR TRENCH REPAIR DETAILS.

PLAN

SCALE: 1" = 40'

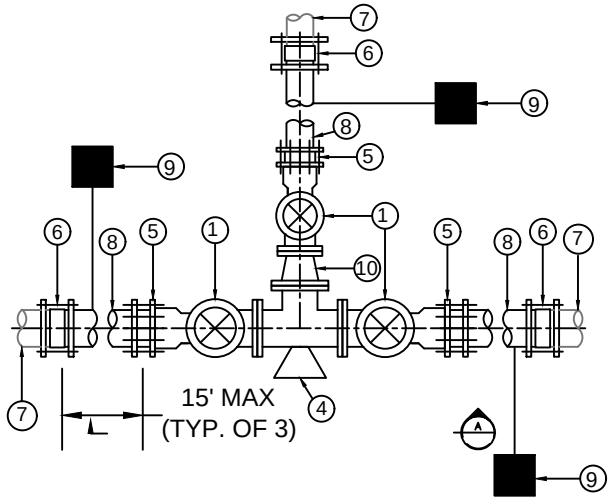

VALVE RELOCATION (PLAN)

N.T.S

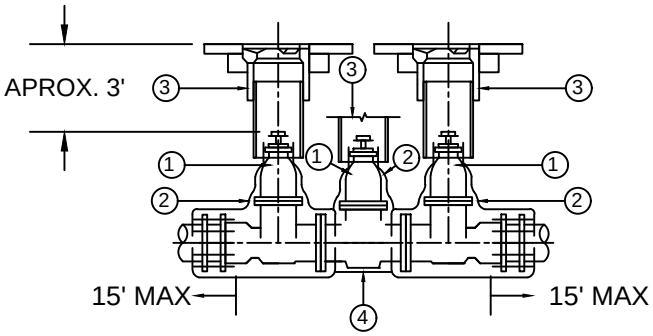

VALVE RELOCATION (SECTION A)

N.T.S

ITEM	DESCRIPTION
1	GATE VALVE FLG x MJ (W-16)
2	POLYETHYLENE ENCASEMENT
3	VALVE BOX ASSEMBLY(W-13)
4	DI TEE FLG x FLG AND THRUST BLOCK (W-15)
5	RESTRAINED MECHANICAL JOINT FITTING
6	PVC TO AC TRANSITION COUPLING
7	EXISTING AC PIPE
8	C900 PVC PIPE (W-2)
9	MANUAL AIR RELEASE VALVE (W-6)
10	6" x 8" DI REDUCER FLG X FLG

C-8B

REVIEWED BY: RECORD DRAWING

INSPECTOR DATE

THIS RECORD DRAWING HAS BEEN PREPARED, IN PART, BASED ON INFORMATION PROVIDED BY OTHERS. TO THE BEST KNOWLEDGE OF THE INSPECTOR INFORMATION PROVIDED IS REASONABLY ACCURATE.

DRAWING NO. XXX-X

DWN BY: CPR
CHKD BY: BW
RVWD BY: KH/EM

KLEINFELDER Bright People. Right Solutions.

SHEET 21 OF 48

PROJECT NO. 5019-E

CITY OF CARLSBAD
ENGINEERING DEPARTMENT

RECORD PLANS FOR:
CMWD VALVE REPLACEMENT PHASE II

SITE NO.:8 - PROPOSED

ACCEPTED BY:
DISTRICT ENGINEER

6/4/2020
DATE

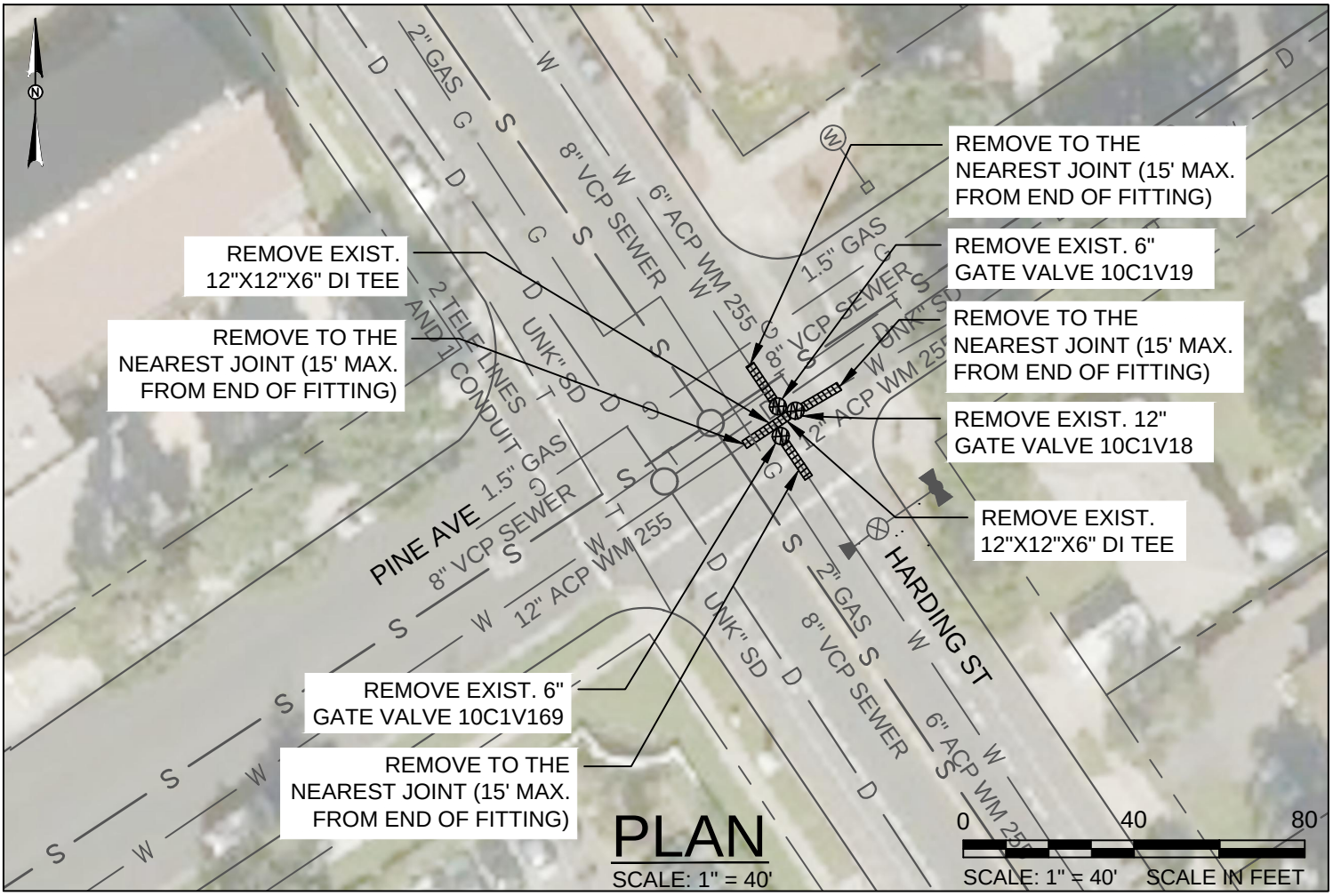

PLAN

SCALE: 1" = 40'

NOTE:

1. ASSUME EXISTING PAVEMENT TO BE 4" AC PAVEMENT WITH 12" OF CLASS II AGGREGATE BASE.

PHOTO 1 - FROM EAST

C-9A

REVIEWED BY: RECORD DRAWING INSPECTOR DATE		CITY OF CARLSBAD ENGINEERING DEPARTMENT
THIS RECORD DRAWING HAS BEEN PREPARED, IN PART, BASED ON INFORMATION PROVIDED BY OTHERS. TO THE BEST KNOWLEDGE OF THE INSPECTOR INFORMATION PROVIDED IS REASONABLY ACCURATE.	DRAWING NO. XXX-X	DWN BY: CPR CHKD BY: BW RVWD BY: KH/EM
KLEINFELDER Bright People. Right Solutions.	SHEET 22 OF 48	PROJECT NO. 5019-E

RECORD PLANS FOR:

CMWD VALVE REPLACEMENT PHASE II

SITE NO.:9 - EXISTING

ACCEPTED BY:

DISTRICT ENGINEER

6/4/2020

DATE

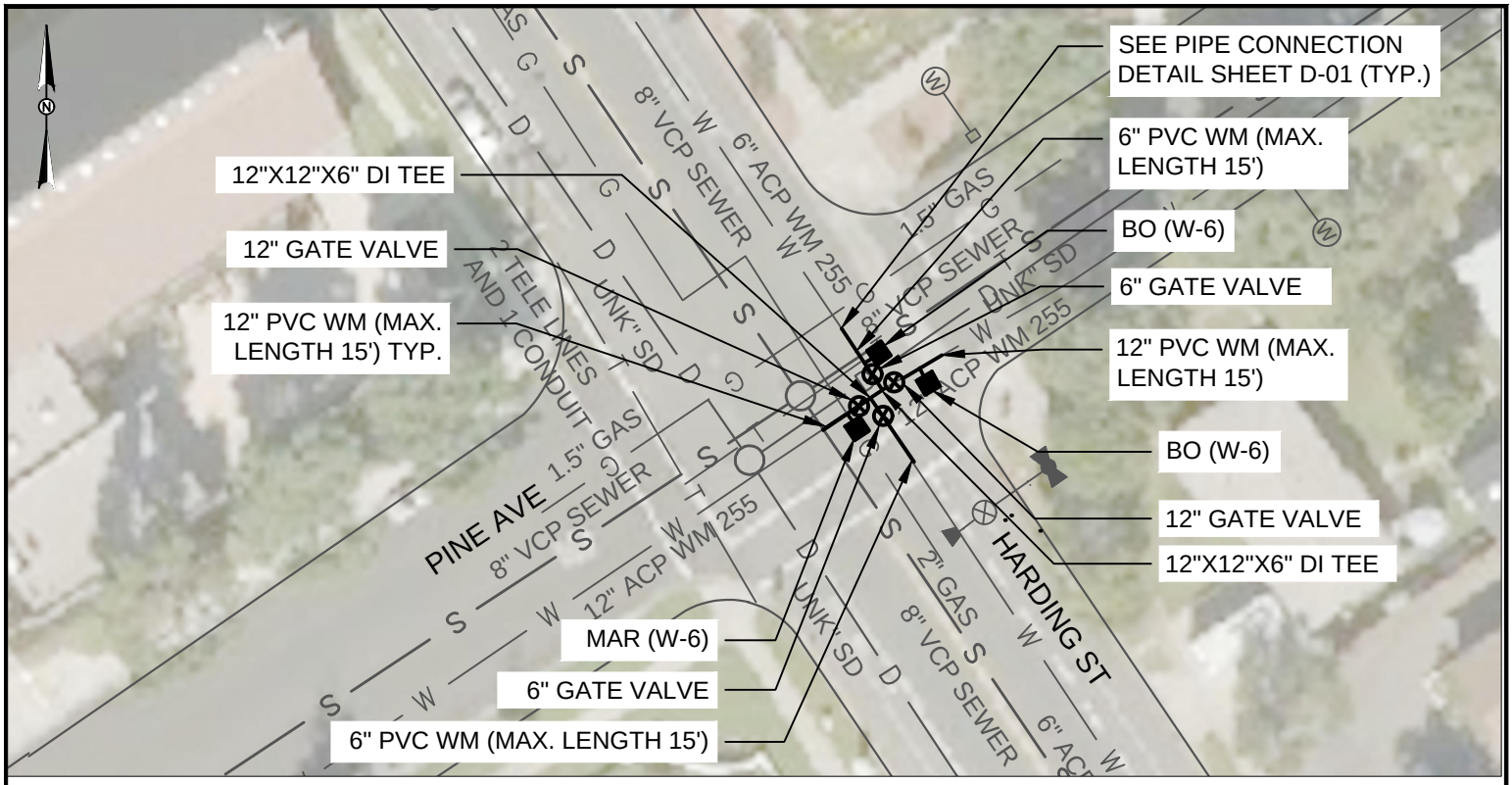

NOTE:

1. SEE CMWD STD. DWGS GS 24 - GS 28 FOR TRENCH REPAIR DETAILS.

PLAN

SCALE: 1" = 40'

0 40 80

SCALE: 1" = 40' SCALE IN FEET

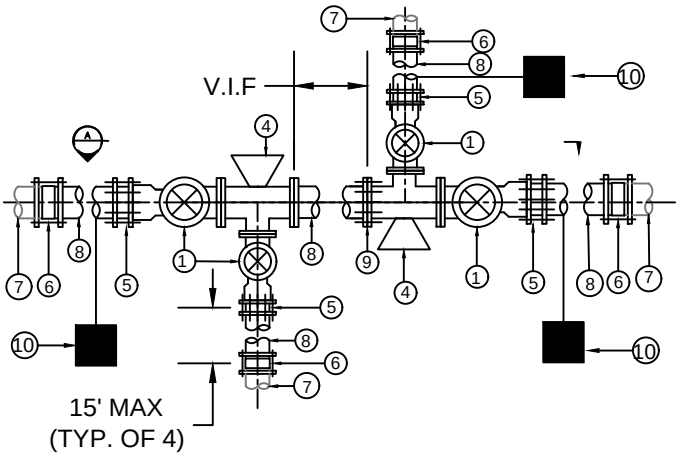

VALVE RELOCATION (PLAN)

N.T.S

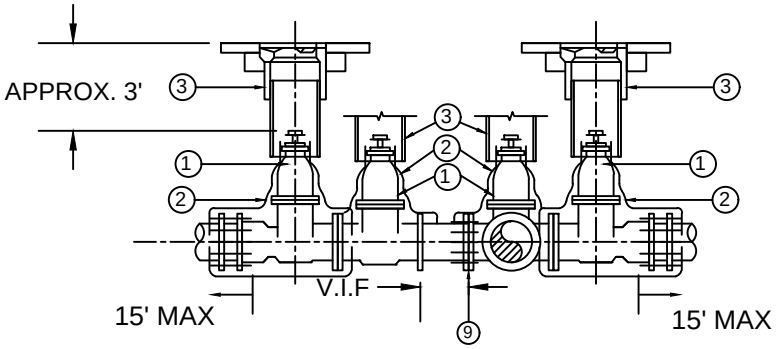

VALVE RELOCATION (SECTION A)

ITEM	DESCRIPTION
1	GATE VALVE FLG x MJ (W-16)
2	POLYETHYLENE ENCASEMENT
3	VALVE BOX ASSEMBLY(W-13)
4	DI TEE FLG x FLG AND THRUST BLOCK (W-15)
5	RESTRAINED MECHANICAL JOINT FITTING
6	PVC TO AC TRANSITION COUPLING
7	EXISTING AC PIPE
8	C900 PVC PIPE (W-2)
9	FLANGE COUPLING ADAPTER
10	MANUAL AIR RELEASE VALVE (W-6)

C-9B

REVIEWED BY: RECORD DRAWING

INSPECTOR DATE

THIS RECORD DRAWING HAS BEEN PREPARED, IN PART, BASED ON INFORMATION PROVIDED BY OTHERS. TO THE BEST KNOWLEDGE OF THE INSPECTOR INFORMATION PROVIDED IS REASONABLY ACCURATE.

DRAWING NO. XXX-X

DWN BY: CPR
CHKD BY: BW
RVWD BY: KH/EM

KLEINFELDER Bright People. Right Solutions.

SHEET 23 OF 48

PROJECT NO. 5019-E

CITY OF CARLSBAD
ENGINEERING DEPARTMENT

RECORD PLANS FOR:
CMWD VALVE REPLACEMENT PHASE II

SITE NO.:9 - PROPOSED

ACCEPTED BY:

DISTRICT ENGINEER DATE 6/4/2020

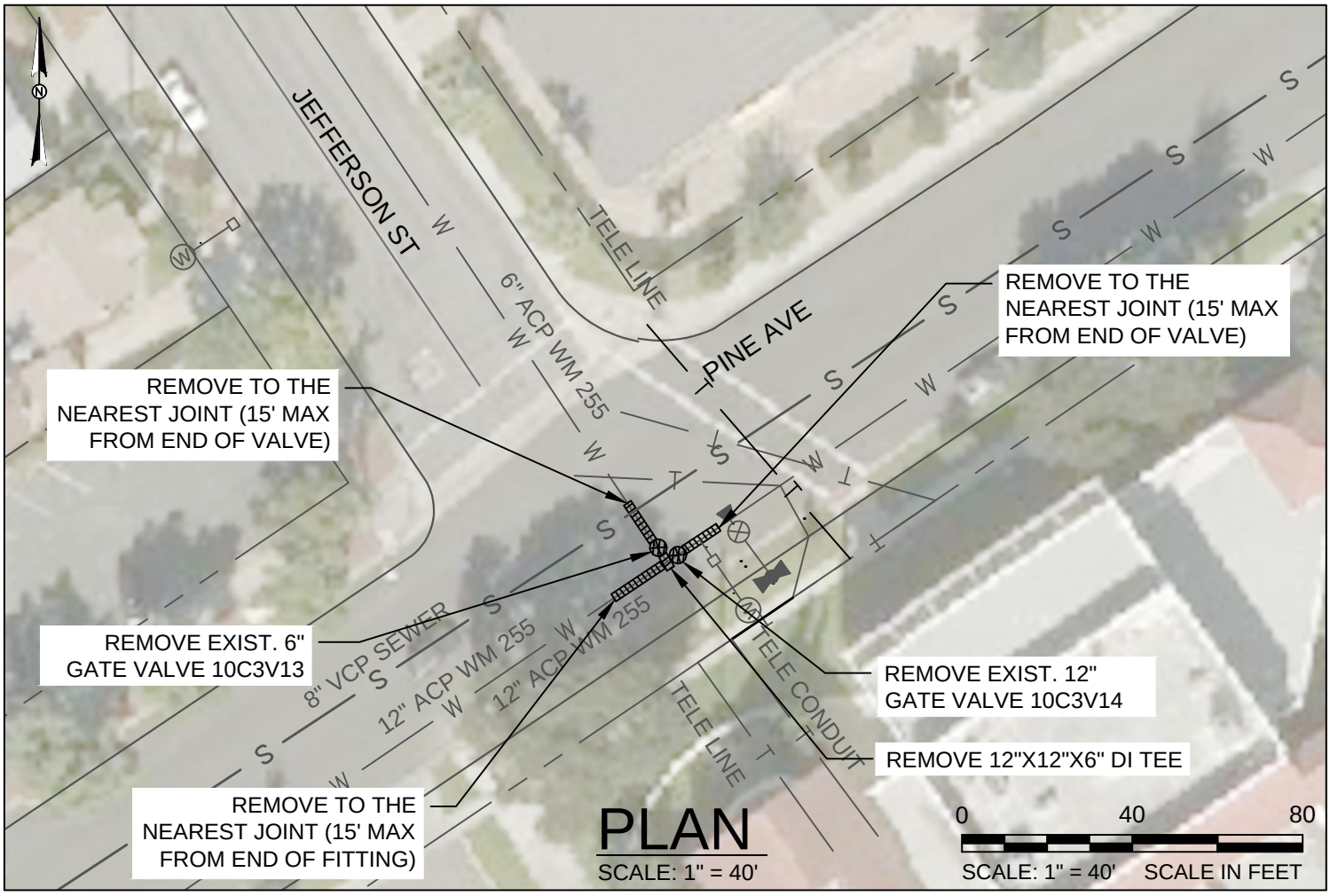

NOTE:

1. ASSUME EXISTING PAVEMENT TO BE 4" AC PAVEMENT WITH 12" OF CLASS II AGGREGATE BASE.

PHOTO 1 - FROM SOUTH

C–10A

REVIEWED BY:		RECORD DRAWING
INSPECTOR		DATE
THIS RECORD DRAWING HAS BEEN PREPARED, IN PART, BASED ON INFORMATION PROVIDED BY OTHERS. TO THE BEST KNOWLEDGE OF THE INSPECTOR INFORMATION PROVIDED IS REASONABLY ACCURATE.	DRAWING NO. XXX–X	DWN BY: CPR CHKD BY: BW RVWD BY: KH/EM
KLEINFELDER Bright People. Right Solutions.	SHEET 24 OF 48	PROJECT NO. 5019–E

CITY OF CARLSBAD
ENGINEERING DEPARTMENT

RECORD PLANS FOR:
CMWD VALVE REPLACEMENT PHASE II

SITE NO.:10 – EXISTING

ACCEPTED BY:
DISTRICT ENGINEER
6/4/2020
DATE

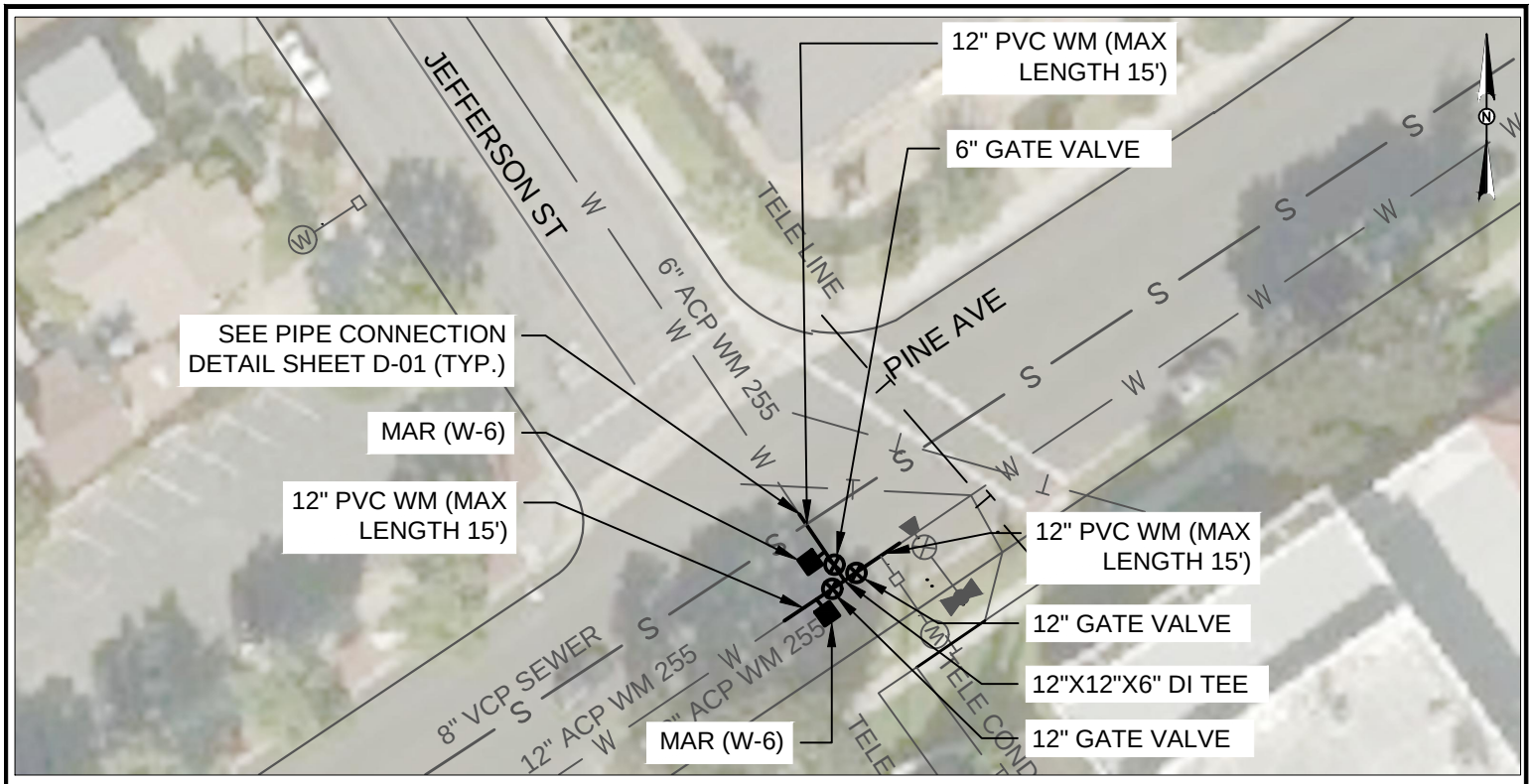

NOTE:

1. SEE CMWD STD. DWGS GS 24 - GS 28 FOR TRENCH REPAIR DETAILS.

PLAN

SCALE: 1" = 40'

0 40 80

SCALE: 1" = 40' SCALE IN FEET

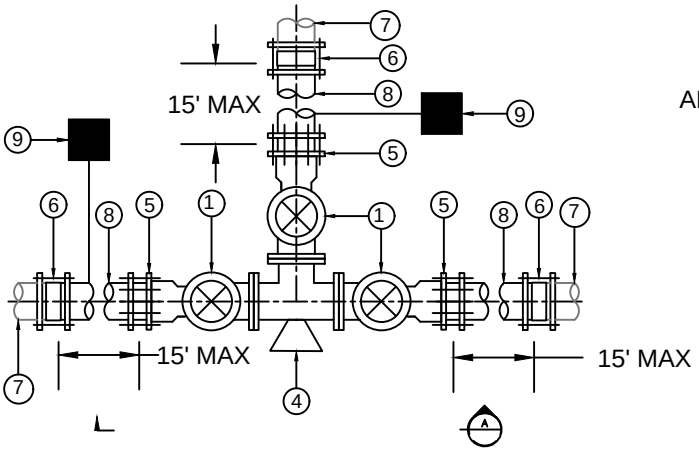

VALVE RELOCATION (PLAN)

N.T.S

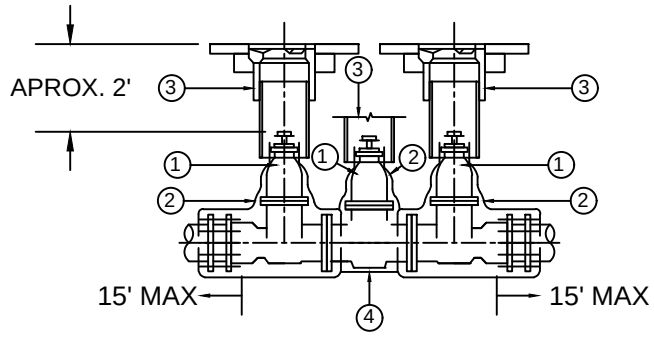

VALVE RELOCATION (SECTION A)

N.T.S

ITEM	DESCRIPTION
1	GATE VALVE FLG x MJ (W-16)
2	POLYETHYLENE ENCASEMENT
3	VALVE BOX ASSEMBLY(W-13)
4	DI TEE FLG x FLG AND THRUST BLOCK (W-15)
5	RESTRAINED MECHANICAL JOINT FITTING
6	PVC TO AC TRANSITION COUPLING
7	EXISTING AC PIPE
8	C900 PVC PIPE (W-2)
9	MANUAL AIR RELEASE VALVE (W-6)

C–10B

REVIEWED BY: RECORD DRAWING

INSPECTOR DATE

THIS RECORD DRAWING HAS BEEN PREPARED, IN PART, BASED ON INFORMATION PROVIDED BY OTHERS. TO THE BEST KNOWLEDGE OF THE INSPECTOR INFORMATION PROVIDED IS REASONABLY ACCURATE.

DRAWING NO. XXX–X

DWN BY: CPR
CHKD BY: BW
RVWD BY: KH/EM

KLEINFELDER Bright People. Right Solutions.

SHEET 25 OF 48

PROJECT NO. 5019–E

CITY OF CARLSBAD
ENGINEERING DEPARTMENT

RECORD PLANS FOR:
CMWD VALVE REPLACEMENT PHASE II

SITE NO.:10 – PROPOSED

ACCEPTED BY:

DISTRICT ENGINEER DATE 6/4/2020

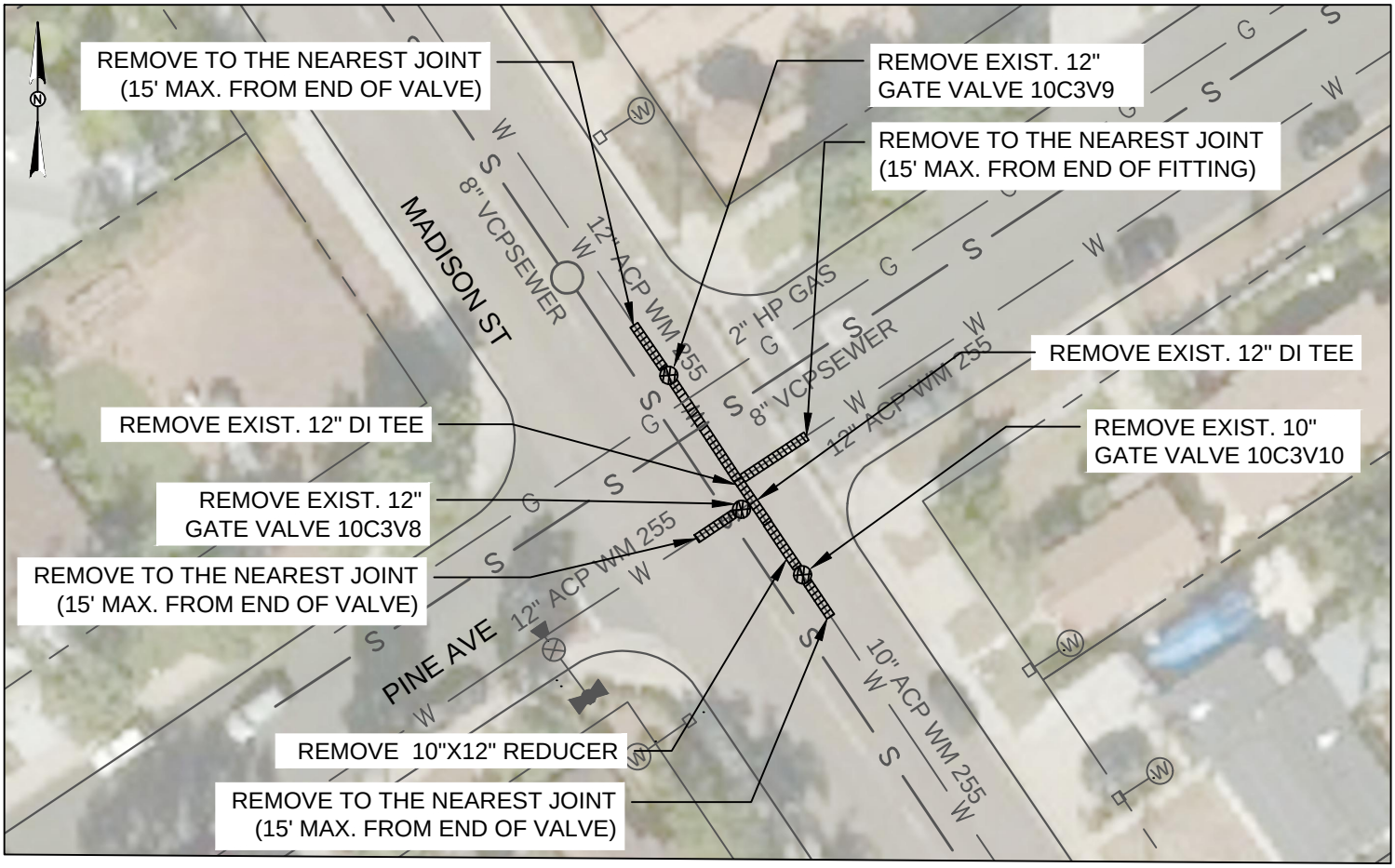

NOTE:

1. ASSUME EXISTING PAVEMENT TO BE 4" AC PAVEMENT WITH 12" OF CLASS II AGGREGATE BASE.
2. OVERHEAD UTILITIES NOT SHOWN FOR CLARITY

0 40 80

SCALE: 1" = 40' SCALE IN FEET

PHOTO 1 - FROM SOUTH

C–11A

REVIEWED BY: RECORD DRAWING

INSPECTOR DATE

THIS RECORD DRAWING HAS BEEN PREPARED, IN PART, BASED ON INFORMATION PROVIDED BY OTHERS. TO THE BEST KNOWLEDGE OF THE INSPECTOR INFORMATION PROVIDED IS REASONABLY ACCURATE.

DRAWING NO. XXX–X

DWN BY: CPR
CHKD BY: BW
RVWD BY: KH/EM

KLEINFELDER Bright People. Right Solutions.

SHEET 26 OF 48

PROJECT NO. 5019–E

CITY OF CARLSBAD
ENGINEERING DEPARTMENT

RECORD PLANS FOR:
CMWD VALVE REPLACEMENT PHASE II

SITE NO.:11 – EXISTING

ACCEPTED BY:
DISTRICT ENGINEER DATE 6/4/2020

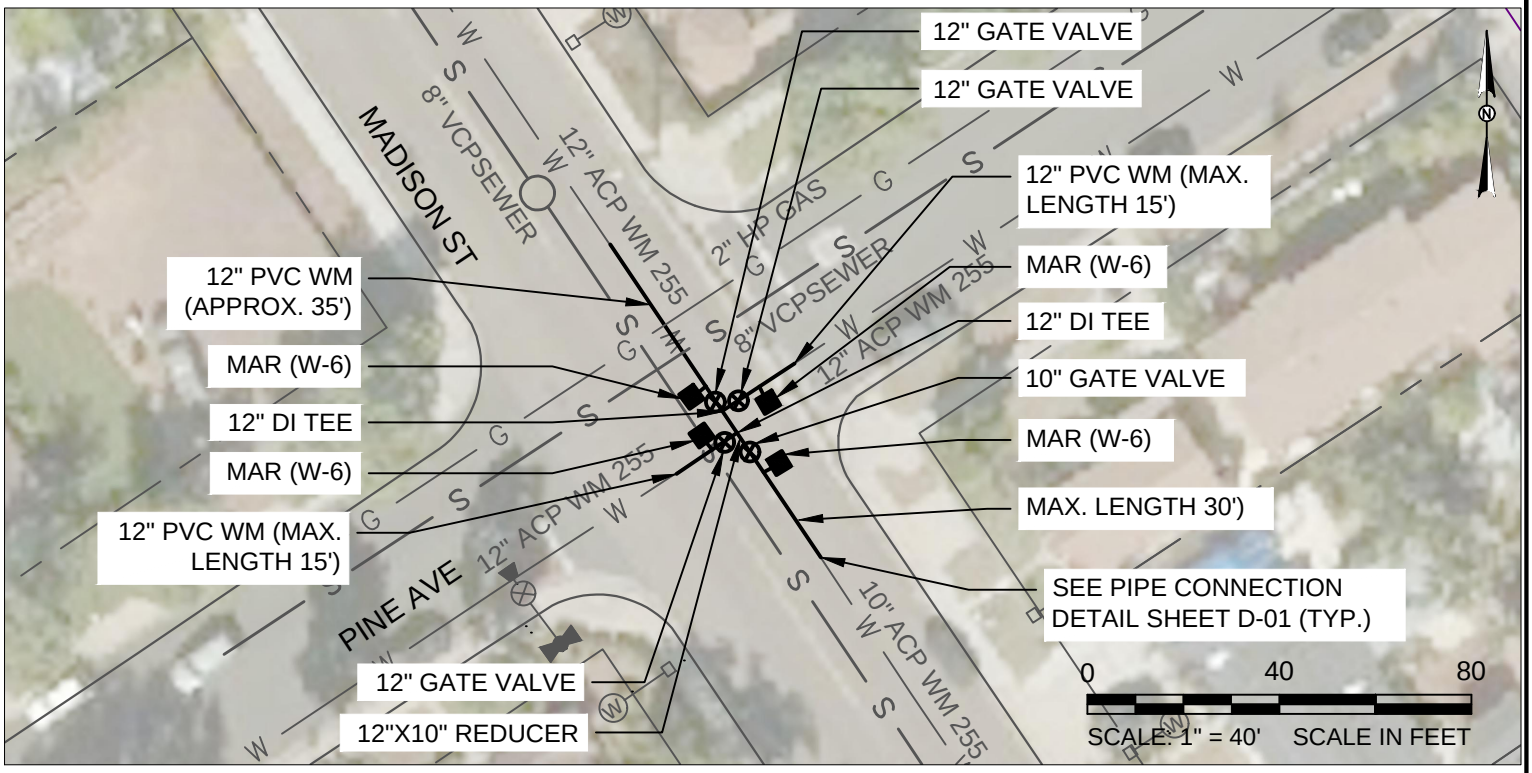

NOTE:

1. SEE CMWD STD. DWGS GS 24 - GS 28 FOR TRENCH REPAIR DETAILS.

PLAN

SCALE: 1" = 40'

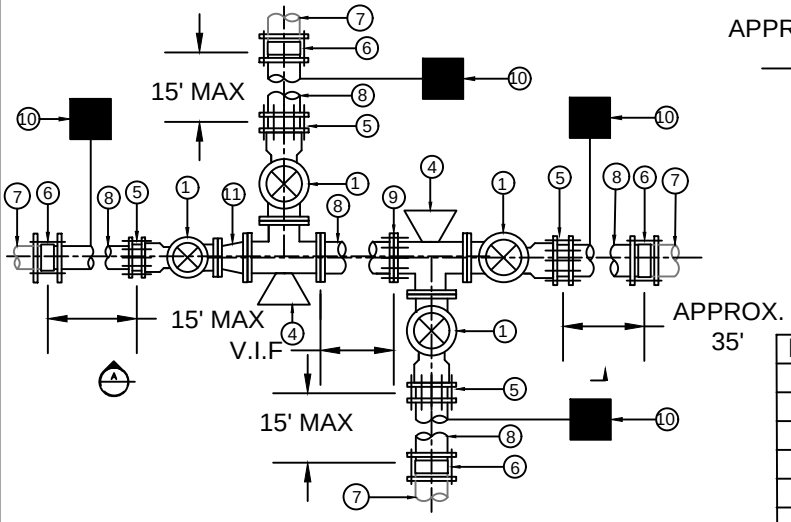

VALVE RELOCATION (PLAN)

N.T.S

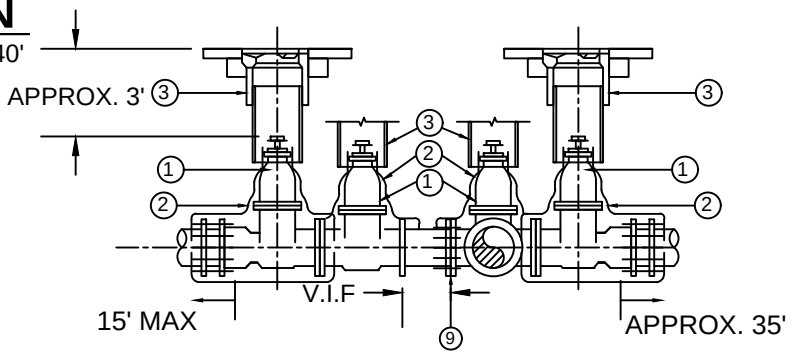

VALVE RELOCATION (SECTION A)

ITEM	DESCRIPTION
1	GATE VALVE FLG x MJ (W-16)
2	POLYETHYLENE ENCASEMENT
3	VALVE BOX ASSEMBLY(W-13)
4	DI TEE FLG x FLG AND THRUST BLOCK (W-15)
5	RESTRAINED MECHANICAL JOINT FITTING
6	PVC TO AC TRANSITION COUPLING
7	EXISTING AC PIPE
8	C900 PVC PIPE (W-2)
9	FLANGE COUPLING ADAPTER
10	MANUAL AIR RELEASE VALVE (W-6)
11	12" x 10" DI REDUCER FLG X FLG

C–11B

REVIEWED BY: RECORD DRAWING

INSPECTOR DATE

THIS RECORD DRAWING HAS BEEN PREPARED, IN PART, BASED ON INFORMATION PROVIDED BY OTHERS. TO THE BEST KNOWLEDGE OF THE INSPECTOR INFORMATION PROVIDED IS REASONABLY ACCURATE.

DRAWING NO. XXX–X

DWN BY: CPR
CHKD BY: BW
RVWD BY: KH/EM

KLEINFELDER Bright People. Right Solutions.

SHEET 27 OF 48

PROJECT NO. 5019–E

CITY OF CARLSBAD
ENGINEERING DEPARTMENT

RECORD PLANS FOR:
CMWD VALVE REPLACEMENT PHASE II

SITE NO.:11 – PROPOSED

ACCEPTED BY:

DISTRICT ENGINEER DATE 6/4/2020

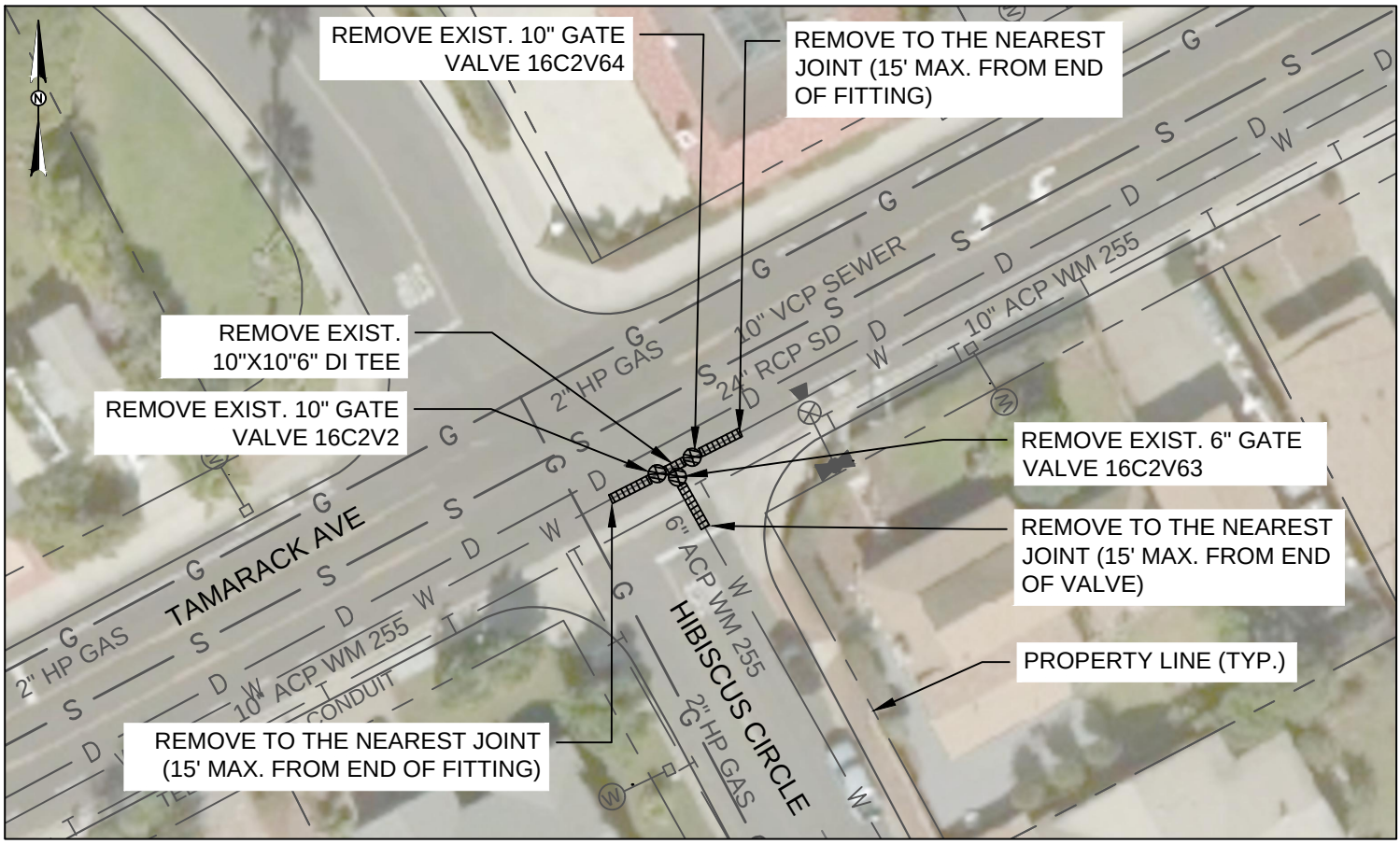

NOTE:

1. ASSUME EXISTING PAVEMENT TO BE 4" AC PAVEMENT WITH 12" OF CLASS II AGGREGATE BASE.

PLAN

SCALE: 1" = 40'

0 40 80

SCALE: 1" = 40' SCALE IN FEET

PHOTO 1 - FROM EAST

C–12A

REVIEWED BY:		RECORD DRAWING
INSPECTOR		DATE
THIS RECORD DRAWING HAS BEEN PREPARED, IN PART, BASED ON INFORMATION PROVIDED BY OTHERS. TO THE BEST KNOWLEDGE OF THE INSPECTOR INFORMATION PROVIDED IS REASONABLY ACCURATE.	DRAWING NO. XXX–X	DWN BY: CPR CHKD BY: BW RVWD BY: KH/EM
KLEINFELDER Bright People. Right Solutions.	SHEET 28 OF 48	PROJECT NO. 5019–E

CITY OF CARLSBAD
ENGINEERING DEPARTMENT

RECORD PLANS FOR:
CMWD VALVE REPLACEMENT PHASE II

SITE NO.:12 – EXISTING

ACCEPTED BY:
DISTRICT ENGINEER — DATE: 6/4/2020

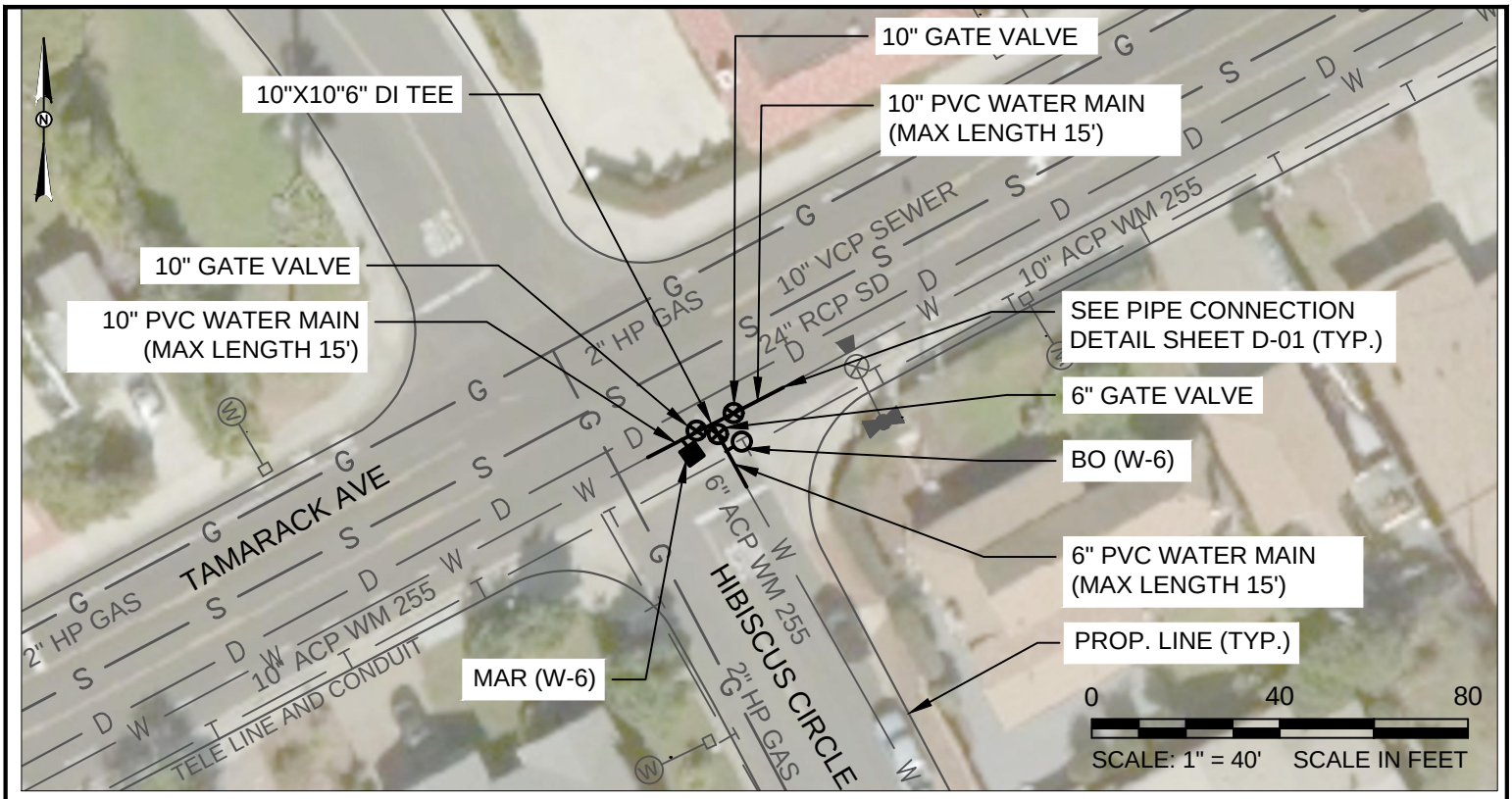

NOTE:

1. SEE CMWD STD. DWGS GS 24 - GS 28 FOR TRENCH REPAIR DETAILS.

PLAN

SCALE: 1" = 40'

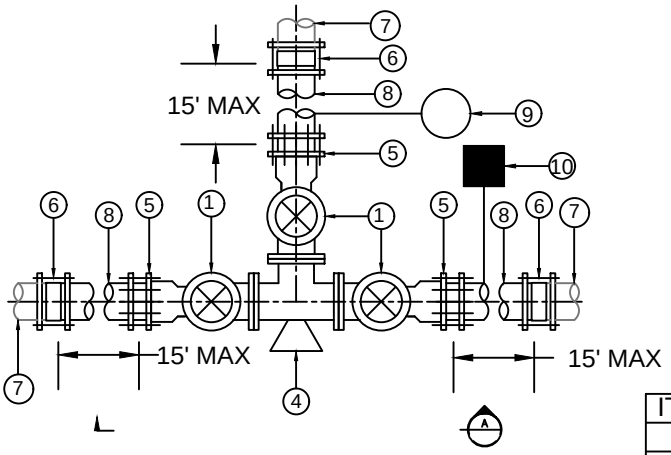

VALVE RELOCATION (PLAN)

N.T.S

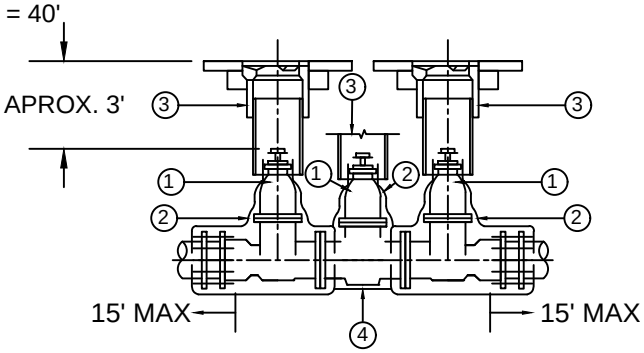

VALVE RELOCATION (SECTION A)

N.T.S

ITEM	DESCRIPTION
1	GATE VALVE FLG x MJ (W-16)
2	POLYETHYLENE ENCASEMENT
3	VALVE BOX ASSEMBLY(W-13)
4	DI TEE FLG x FLG AND THRUST BLOCK (W-15)
5	RESTRAINED MECHANICAL JOINT FITTING
6	PVC TO AC TRANSITION COUPLING
7	EXISTING AC PIPE
8	C900 PVC PIPE (W-2)
9	BLOW-OFF (W-6)
10	MANUAL AIR RELEASE VALVE (W-6)

C–12B

REVIEWED BY: RECORD DRAWING

INSPECTOR DATE

THIS RECORD DRAWING HAS BEEN PREPARED, IN PART, BASED ON INFORMATION PROVIDED BY OTHERS. TO THE BEST KNOWLEDGE OF THE INSPECTOR INFORMATION PROVIDED IS REASONABLY ACCURATE.

DRAWING NO. XXX–X

DWN BY: CPR
CHKD BY: BW
RVWD BY: KH/EM

KLEINFELDER Bright People. Right Solutions.

SHEET 29 OF 48

PROJECT NO. 5019–E

CITY OF CARLSBAD
ENGINEERING DEPARTMENT

RECORD PLANS FOR:
CMWD VALVE REPLACEMENT PHASE II

SITE NO.:12 – PROPOSED

ACCEPTED BY:
DISTRICT ENGINEER

6/4/2020
DATE

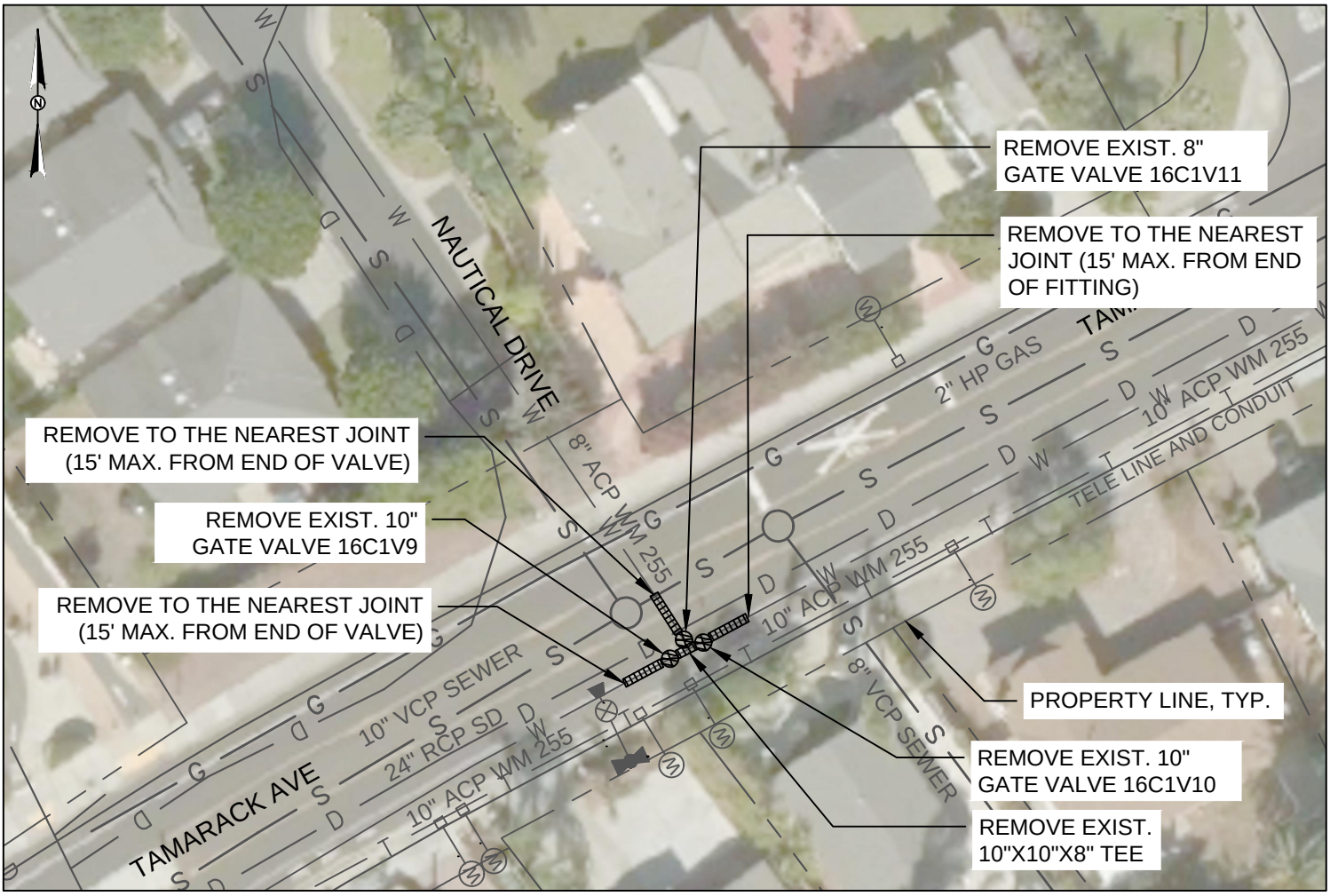

NOTE:

1. ASSUME EXISTING PAVEMENT TO BE 4" AC PAVEMENT WITH 12" OF CLASS II AGGREGATE BASE.

PLAN

SCALE: 1" = 40'

0 40 80

SCALE: 1" = 40' SCALE IN FEET

PHOTO 1 - FROM SOUTH

C-13A

REVIEWED BY: RECORD DRAWING INSPECTOR DATE		CITY OF CARLSBAD ENGINEERING DEPARTMENT
THIS RECORD DRAWING HAS BEEN PREPARED, IN PART, BASED ON INFORMATION PROVIDED BY OTHERS. TO THE BEST KNOWLEDGE OF THE INSPECTOR INFORMATION PROVIDED IS REASONABLY ACCURATE.	DRAWING NO. XXX-X	DWN BY: CPR CHKD BY: BW RVWD BY: KH/EM
KLEINFELDER Bright People. Right Solutions.	SHEET 30 OF 48	PROJECT NO. 5019-E

RECORD PLANS FOR:
CMWD VALVE REPLACEMENT PHASE II

SITE NO.:13 – EXISTING

ACCEPTED BY:
DISTRICT ENGINEER DATE 6/4/2020

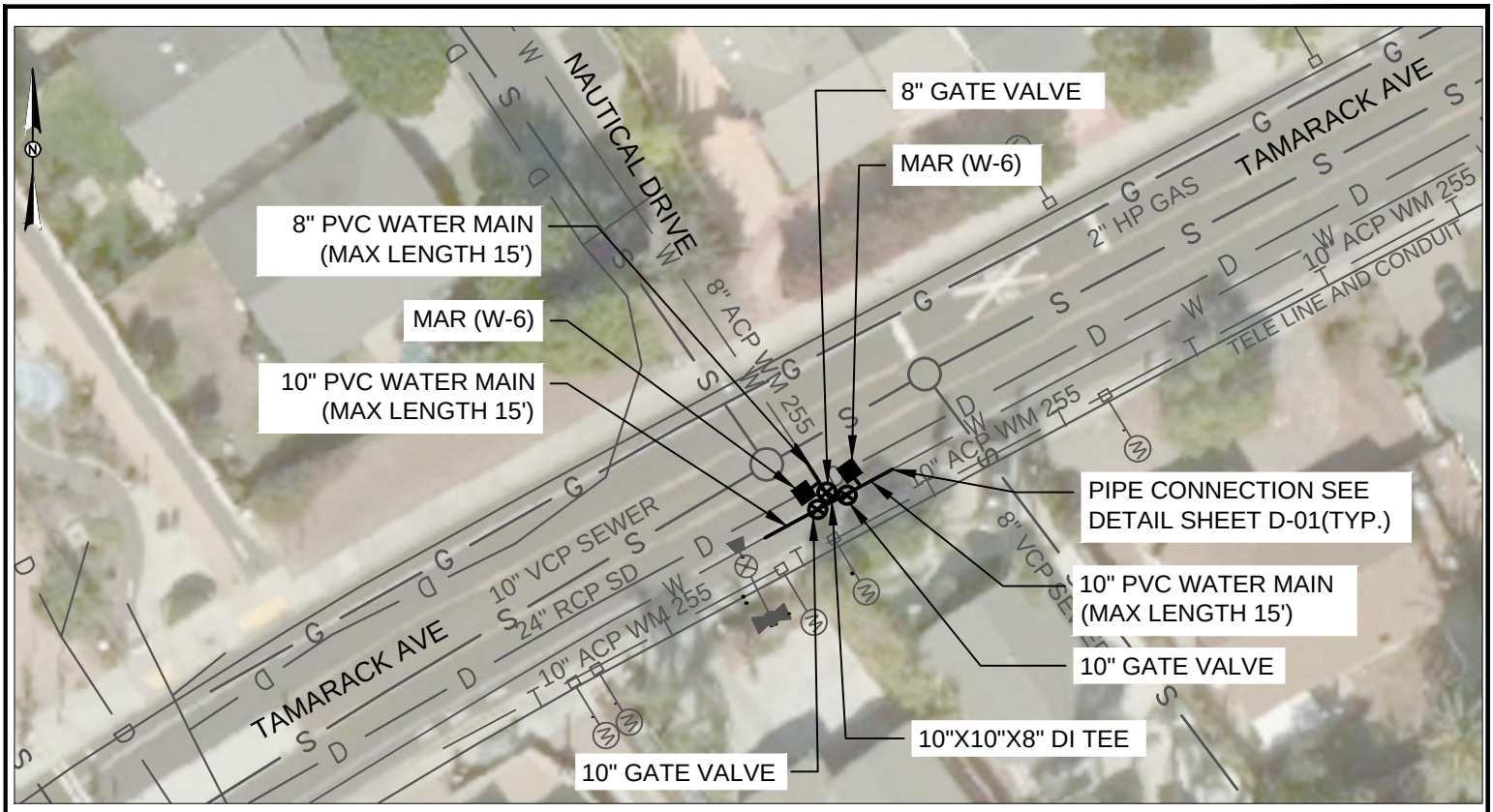

NOTE:

1. SEE CMWD STD. DWGS GS 24 - GS 28 FOR TRENCH REPAIR DETAILS.

PLAN

SCALE: 1" = 40'

0 41.9617 83.9235

SCALE: 1" = 41.9617 SCALE IN FEET

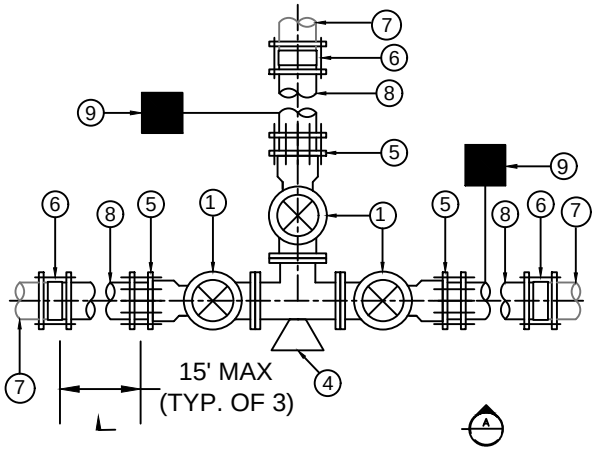

VALVE RELOCATION (PLAN)

N.T.S

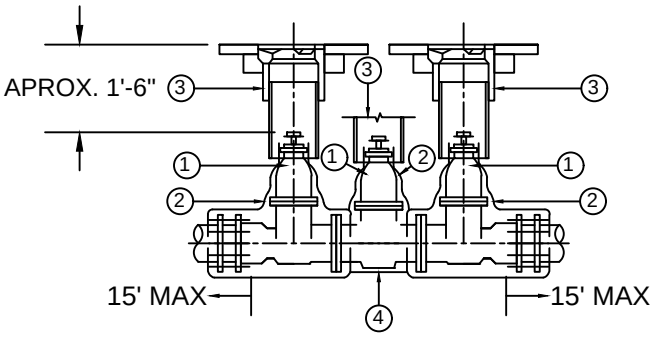

VALVE RELOCATION (SECTION A)

N.T.S

ITEM	DESCRIPTION
1	GATE VALVE FLG x MJ (W-16)
2	POLYETHYLENE ENCASEMENT
3	VALVE BOX ASSEMBLY(W-13)
4	DI TEE FLG x FLG AND THRUST BLOCK (W-15)
5	RESTRAINED MECHANICAL JOINT FITTING
6	PVC TO AC TRANSITION COUPLING
7	EXISTING AC PIPE
8	C900 PVC PIPE (W-2)
9	MANUAL AIR RELEASE VALVE (W-6)

C–13B

REVIEWED BY: RECORD DRAWING

INSPECTOR DATE

THIS RECORD DRAWING HAS BEEN PREPARED, IN PART, BASED ON INFORMATION PROVIDED BY OTHERS. TO THE BEST KNOWLEDGE OF THE INSPECTOR INFORMATION PROVIDED IS REASONABLY ACCURATE.

DRAWING NO. XXX–X

DWN BY: CPR
CHKD BY: BW
RVWD BY: KH/EM

KLEINFELDER Bright People. Right Solutions.

SHEET 31 OF 48

PROJECT NO. 5019–E

CITY OF CARLSBAD
ENGINEERING DEPARTMENT

RECORD PLANS FOR:
CMWD VALVE REPLACEMENT PHASE II

SITE NO.:13 – PROPOSED

ACCEPTED BY:
DISTRICT ENGINEER

6/4/2020
DATE

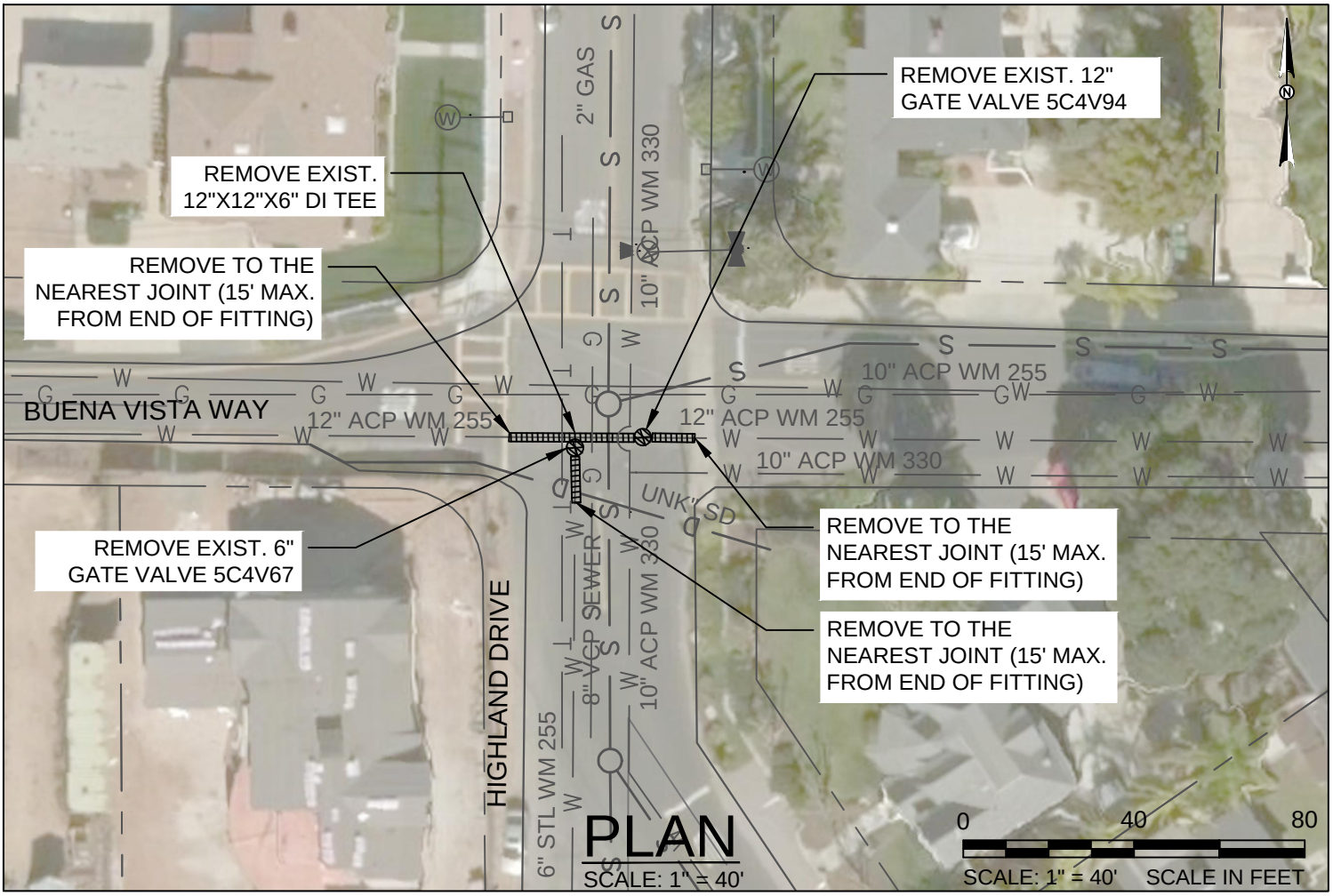

NOTE:

1. ASSUME EXISTING PAVEMENT TO BE 4" AC PAVEMENT WITH 12" OF CLASS II AGGREGATE BASE.

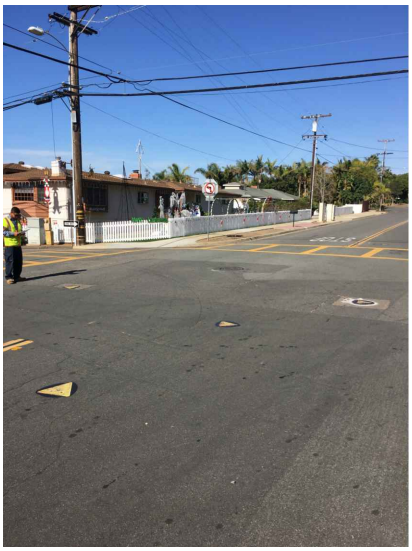

PHOTO 1 - FROM EAST

C-14A

REVIEWED BY: RECORD DRAWING INSPECTOR DATE		CITY OF CARLSBAD ENGINEERING DEPARTMENT
THIS RECORD DRAWING HAS BEEN PREPARED, IN PART, BASED ON INFORMATION PROVIDED BY OTHERS. TO THE BEST KNOWLEDGE OF THE INSPECTOR INFORMATION PROVIDED IS REASONABLY ACCURATE.	DRAWING NO. XXX-X	DWN BY: CPR CHKD BY: BW RVWD BY: KH/EM
KLEINFELDER Bright People. Right Solutions.	SHEET 32 OF 48	PROJECT NO. 5019-E

RECORD PLANS FOR:
CMWD VALVE REPLACEMENT PHASE II

SITE NO.:14 EXISTING

ACCEPTED BY:
DISTRICT ENGINEER — DATE 6/4/2020

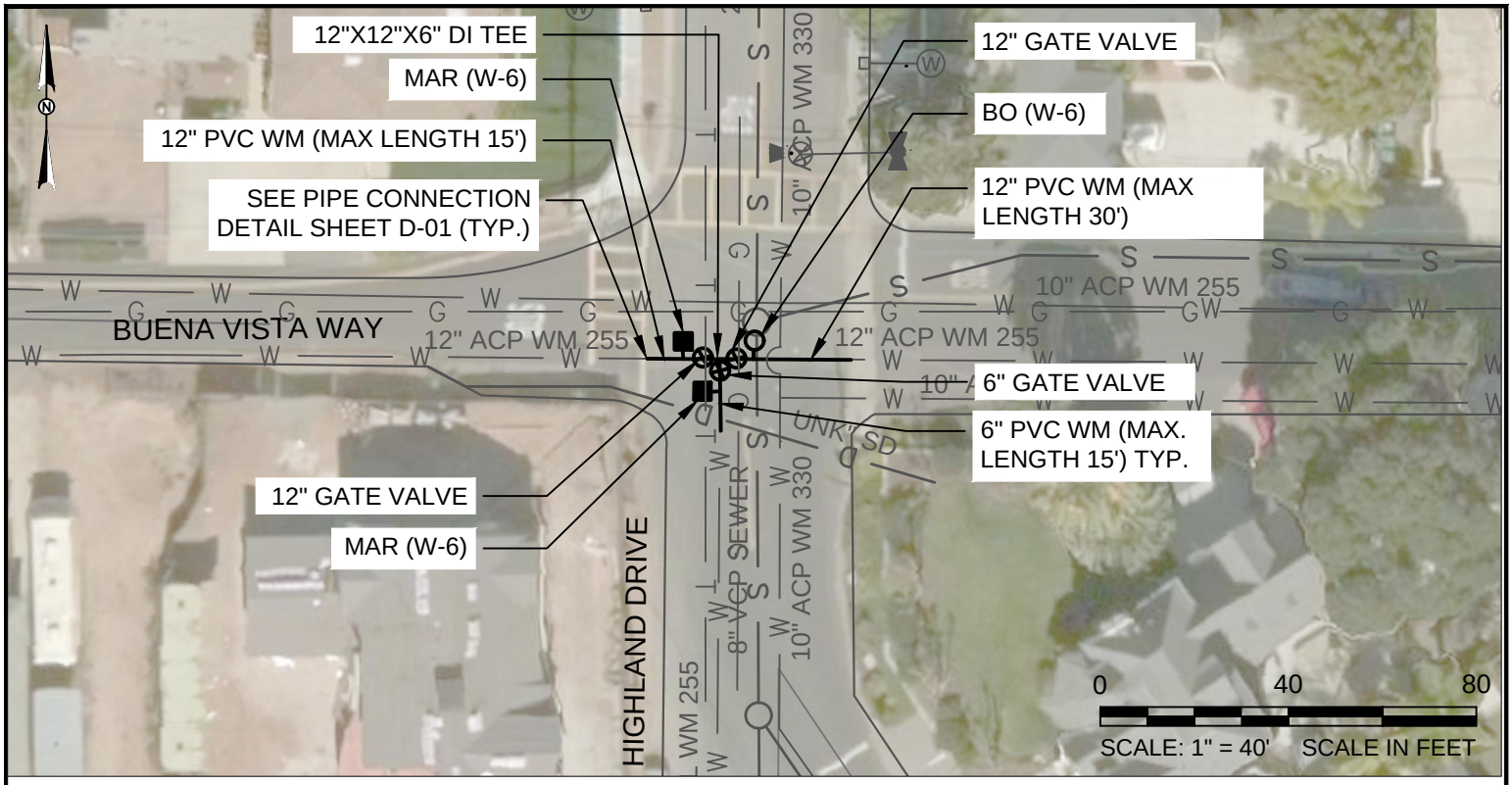

NOTE:

1. SEE CMWD STD. DWGS GS 24 - GS 28 FOR TRENCH REPAIR DETAILS.

PLAN

SCALE: 1" = 40'

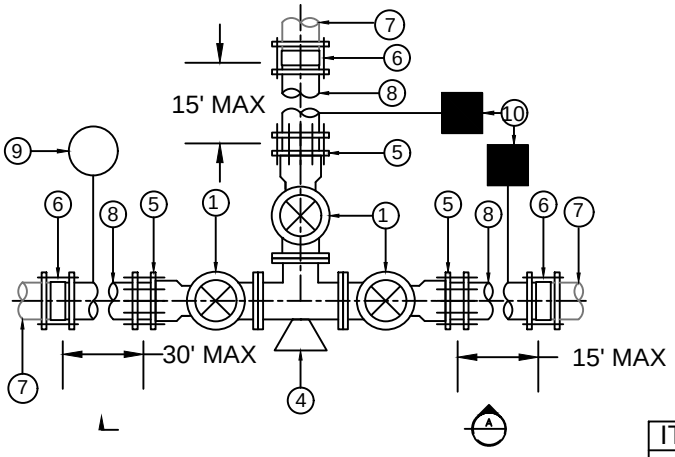

VALVE RELOCATION (PLAN)

N.T.S

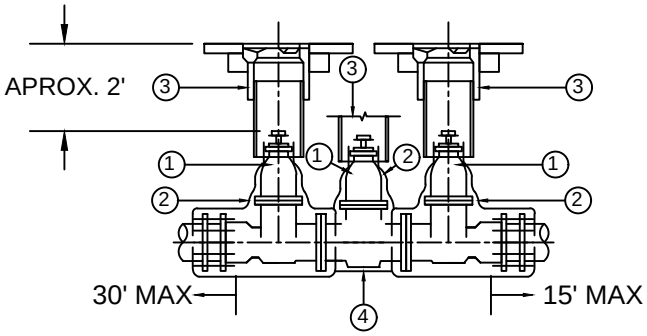

VALVE RELOCATION (SECTION A)

N.T.S

ITEM	DESCRIPTION
1	GATE VALVE FLG x MJ (W-16)
2	POLYETHYLENE ENCASEMENT
3	VALVE BOX ASSEMBLY(W-13)
4	DI TEE FLG x FLG AND THRUST BLOCK (W-15)
5	RESTRAINED MECHANICAL JOINT FITTING
6	PVC TO AC TRANSITION COUPLING
7	EXISTING AC PIPE
8	C900 PVC PIPE (W-2)
9	BLOW-OFF (W-6)
10	MANUAL AIR RELEASE VALVE (W-6)

C–14B

REVIEWED BY: RECORD DRAWING

INSPECTOR DATE

THIS RECORD DRAWING HAS BEEN PREPARED, IN PART, BASED ON INFORMATION PROVIDED BY OTHERS. TO THE BEST KNOWLEDGE OF THE INSPECTOR INFORMATION PROVIDED IS REASONABLY ACCURATE.

DRAWING NO. XXX–X

DWN BY: CPR
CHKD BY: BW
RVWD BY: KH/EM

KLEINFELDER Bright People. Right Solutions.

SHEET 33 OF 48

PROJECT NO. 5019–E

CITY OF CARLSBAD
ENGINEERING DEPARTMENT

RECORD PLANS FOR:
CMWD VALVE REPLACEMENT PHASE II

SITE NO.:14 – PROPOSED

ACCEPTED BY:
DISTRICT ENGINEER DATE 6/4/2020

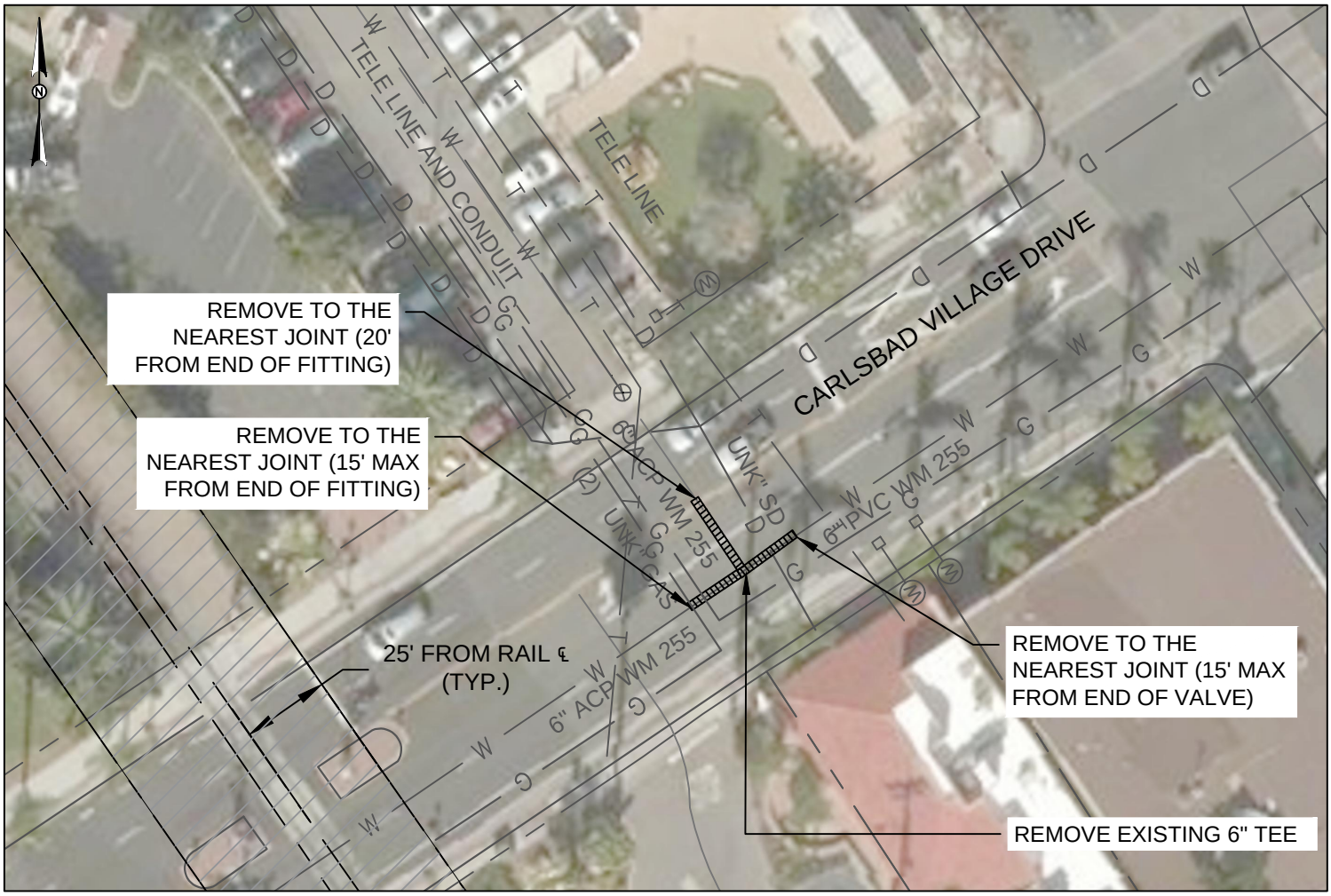

NOTE:

1. ASSUME EXISTING PAVEMENT TO BE 4" AC PAVEMENT WITH 12" OF CLASS II AGGREGATE BASE.
2. CONTRACTOR SHALL NOT ENTER NORTH COUNTY TRANSIT DISTRICT RIGHT OF WAY OR 25' FOUL AREA.

PLAN

SCALE: 1" = 40'

0 40 80

SCALE: 1" = 40' SCALE IN FEET

PHOTO 1 - FROM NORTH

C–15A

REVIEWED BY:		RECORD DRAWING
INSPECTOR		DATE
THIS RECORD DRAWING HAS BEEN PREPARED, IN PART, BASED ON INFORMATION PROVIDED BY OTHERS. TO THE BEST KNOWLEDGE OF THE INSPECTOR INFORMATION PROVIDED IS REASONABLY ACCURATE.	DRAWING NO. XXX–X	DWN BY: CPR CHKD BY: BW RVWD BY: KH/EM
KLEINFELDER Bright People. Right Solutions.	SHEET 34 OF 48	PROJECT NO. 5019–E

CITY OF CARLSBAD
ENGINEERING DEPARTMENT

RECORD PLANS FOR:
CMWD VALVE REPLACEMENT PHASE II

SITE NO.:15 – EXISTING

ACCEPTED BY:
DISTRICT ENGINEER — DATE 6/4/2020

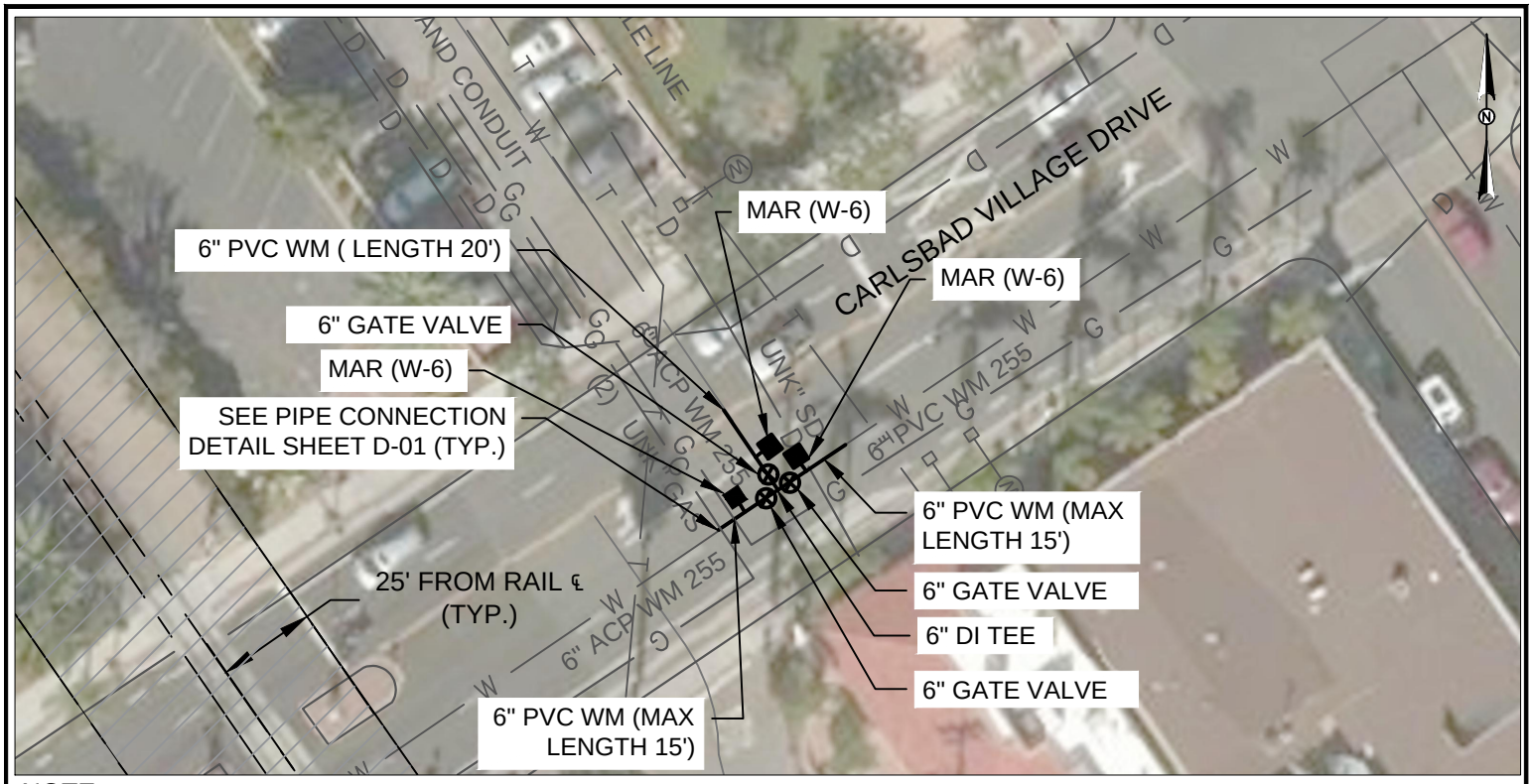

NOTE:

1. SEE CMWD STD. DWGS GS 24 - GS 28 FOR TRENCH REPAIR DETAILS.
2. CONTRACTOR SHALL NOT ENTER NORTH COUNTY TRANSIT DISTRICT RIGHT OF WAY OR 25' FOUL AREA.

PLAN

SCALE: 1" = 40'

0 40 80

SCALE: 1" = 40' SCALE IN FEET

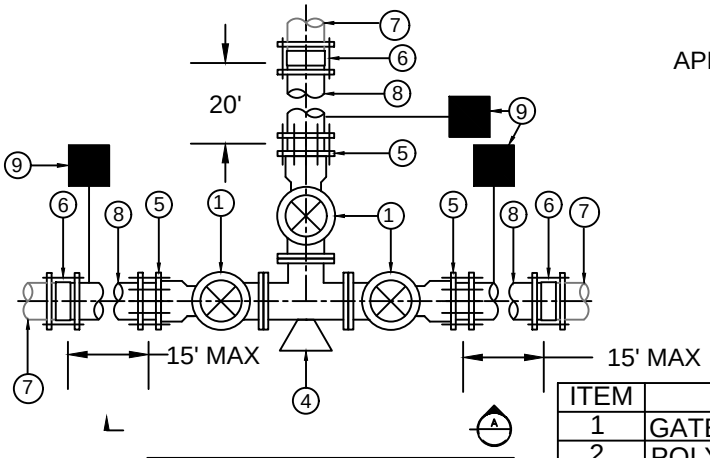

VALVE RELOCATION (PLAN)

N.T.S

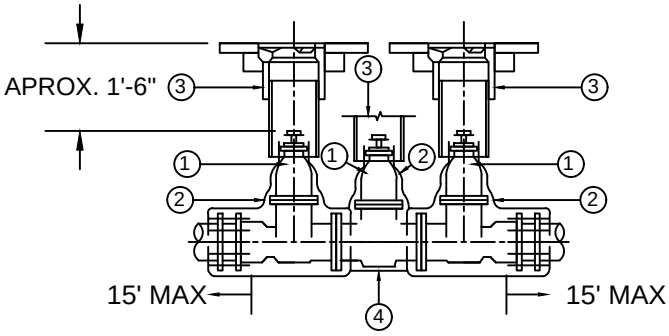

VALVE RELOCATION (SECTION A)

N.T.S

ITEM	DESCRIPTION
1	GATE VALVE FLG x MJ (W-16)
2	POLYETHYLENE ENCASEMENT
3	VALVE BOX ASSEMBLY(W-13)
4	DI TEE FLG x FLG AND THRUST BLOCK (W-15)
5	RESTRAINED MECHANICAL JOINT FITTING
6	PVC TO AC TRANSITION COUPLING
7	EXISTING AC PIPE
8	C900 PVC PIPE (W-2)
9	MANUAL AIR RELEASE VALVE (W-6)

C–15B

REVIEWED BY: RECORD DRAWING

INSPECTOR DATE

THIS RECORD DRAWING HAS BEEN PREPARED, IN PART, BASED ON INFORMATION PROVIDED BY OTHERS. TO THE BEST KNOWLEDGE OF THE INSPECTOR INFORMATION PROVIDED IS REASONABLY ACCURATE.

DRAWING NO. XXX–X

DWN BY: CPR
CHKD BY: BW
RVWD BY: KH/EM

KLEINFELDER Bright People. Right Solutions.

SHEET 35 OF 48

PROJECT NO. 5019–E

CITY OF CARLSBAD
ENGINEERING DEPARTMENT

RECORD PLANS FOR:
CMWD VALVE REPLACEMENT PHASE II

SITE NO.:15 – PROPOSED

ACCEPTED BY:

DISTRICT ENGINEER DATE 6/4/2020

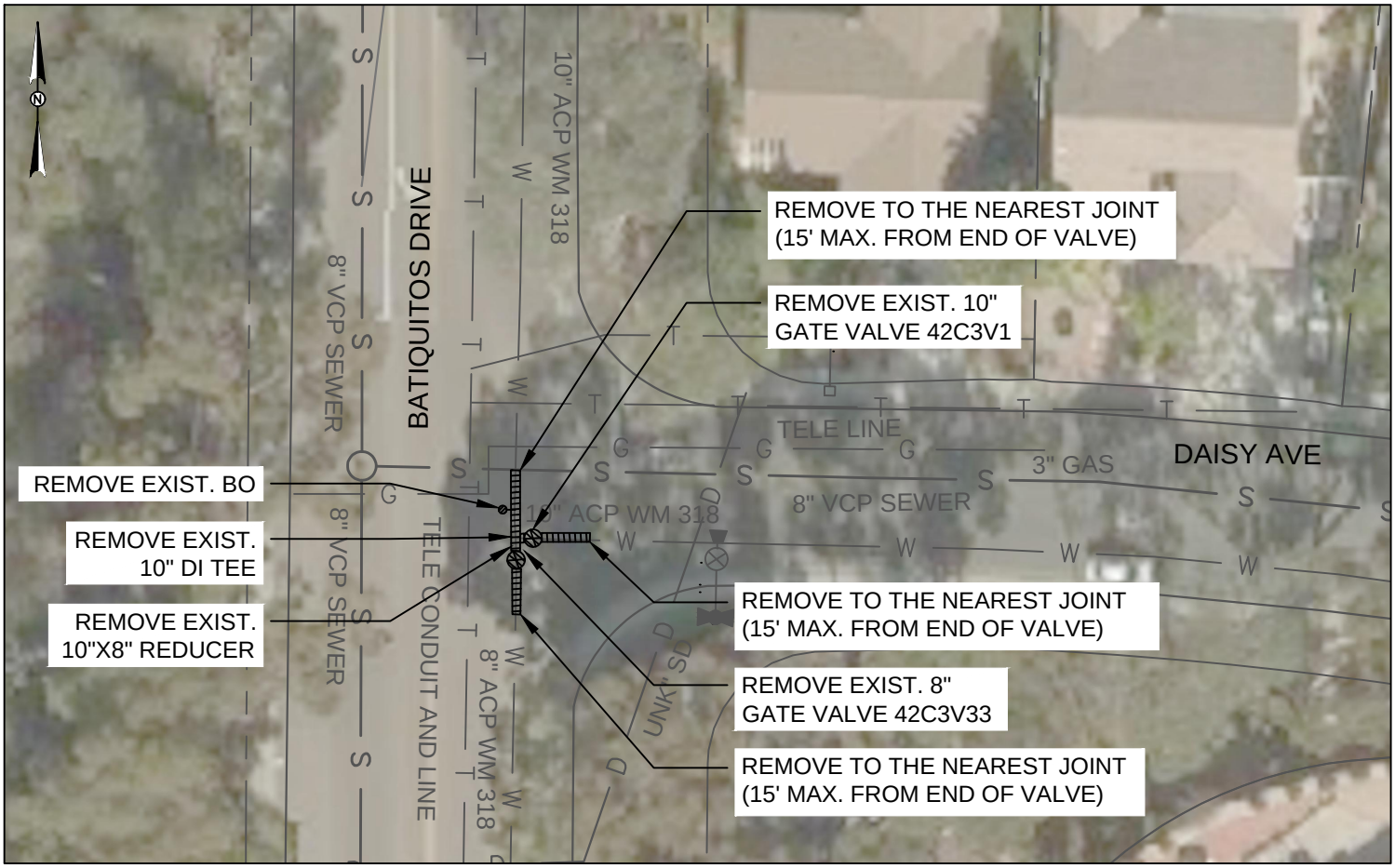

NOTE:

1. ASSUME EXISTING PAVEMENT TO BE 4" AC PAVEMENT WITH 12" OF CLASS II AGGREGATE BASE.

PLAN

SCALE: 1" = 40'

0 40 80

SCALE: 1" = 40' SCALE IN FEET

PHOTO 1 - FROM NORTH

C–16A

REVIEWED BY: RECORD DRAWING INSPECTOR DATE		CITY OF CARLSBAD ENGINEERING DEPARTMENT
THIS RECORD DRAWING HAS BEEN PREPARED, IN PART, BASED ON INFORMATION PROVIDED BY OTHERS. TO THE BEST KNOWLEDGE OF THE INSPECTOR INFORMATION PROVIDED IS REASONABLY ACCURATE.	DRAWING NO. XXX–X	DWN BY: CPR CHKD BY: BW RVWD BY: KH/EM
KLEINFELDER Bright People. Right Solutions.	SHEET 36 OF 48	PROJECT NO. 5019–E

RECORD PLANS FOR:

CMWD VALVE REPLACEMENT PHASE II

SITE NO.:16 – EXISTING

ACCEPTED BY:

DISTRICT ENGINEER 6/4/2020 DATE

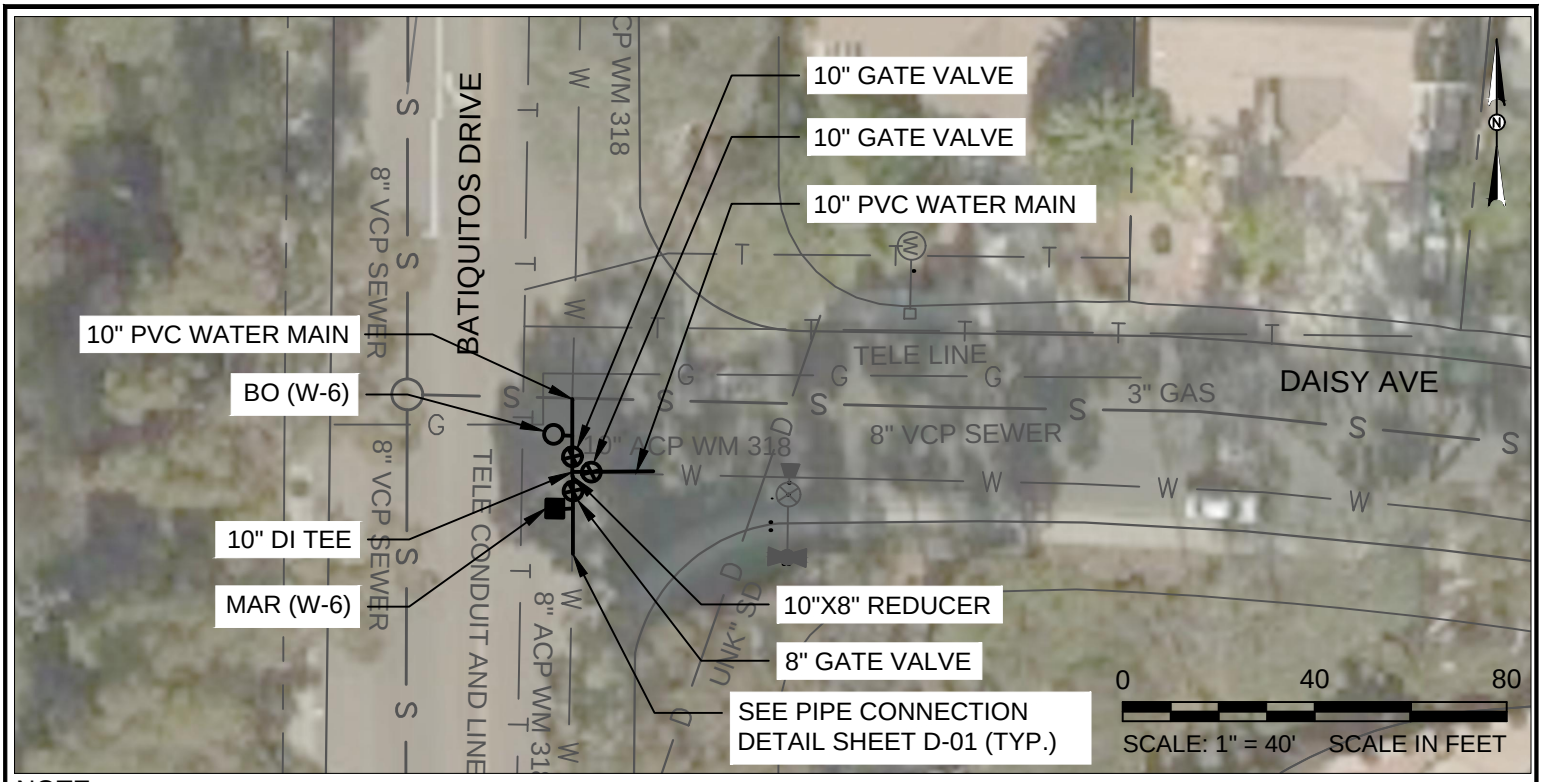

NOTE:

1. SEE CMWD STD. DWGS GS 24 - GS 28 FOR TRENCH REPAIR DETAILS.

PLAN

SCALE: 1" = 40'

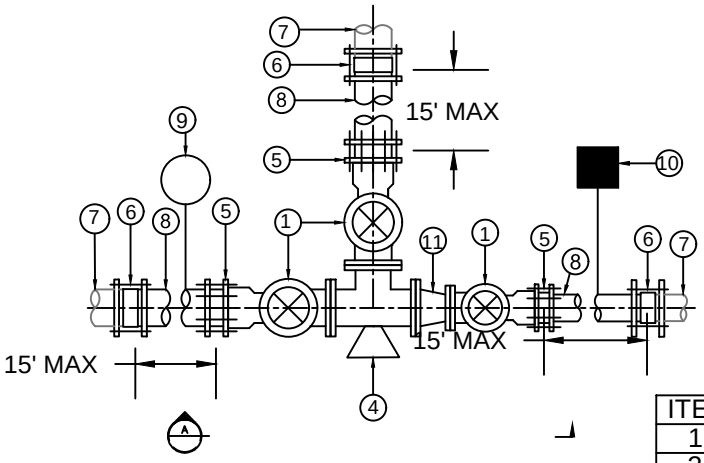

VALVE RELOCATION (PLAN)

N.T.S

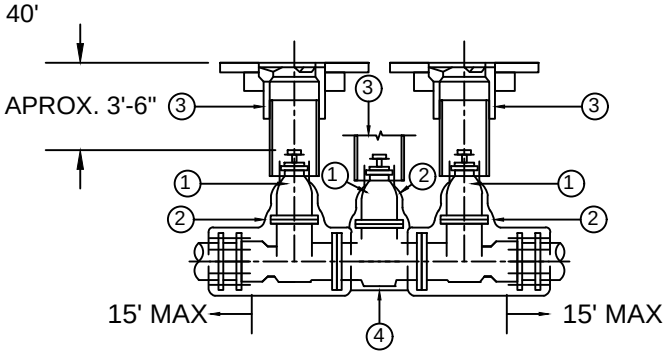

VALVE RELOCATION (SECTION A)

N.T.S

ITEM	DESCRIPTION
1	GATE VALVE FLG x MJ (W-16)
2	POLYETHYLENE ENCASEMENT
3	VALVE BOX ASSEMBLY(W-13)
4	DI TEE FLG x FLG AND THRUST BLOCK (W-15)
5	RESTRAINED MECHANICAL JOINT FITTING
6	PVC TO AC TRANSITION COUPLING
7	EXISTING AC PIPE
8	C900 PVC PIPE (W-2)
9	BLOW-OFF (W-6)
10	MANUAL AIR RELEASE VALVE (W-6)
11	10" x 8" DI REDUCER FLG X FLG

C–16B

REVIEWED BY: RECORD DRAWING

INSPECTOR DATE

THIS RECORD DRAWING HAS BEEN PREPARED, IN PART, BASED ON INFORMATION PROVIDED BY OTHERS. TO THE BEST KNOWLEDGE OF THE INSPECTOR INFORMATION PROVIDED IS REASONABLY ACCURATE.

DRAWING NO. XXX–X

DWN BY: CPR
CHKD BY: BW
RVWD BY: KH/EM

KLEINFELDER Bright People. Right Solutions.

SHEET 37 OF 48

PROJECT NO. 5019–E

CITY OF CARLSBAD
ENGINEERING DEPARTMENT

RECORD PLANS FOR:
CMWD VALVE REPLACEMENT PHASE II

SITE NO.:16 – PROPOSED

ACCEPTED BY:
DISTRICT ENGINEER DATE 6/4/2020

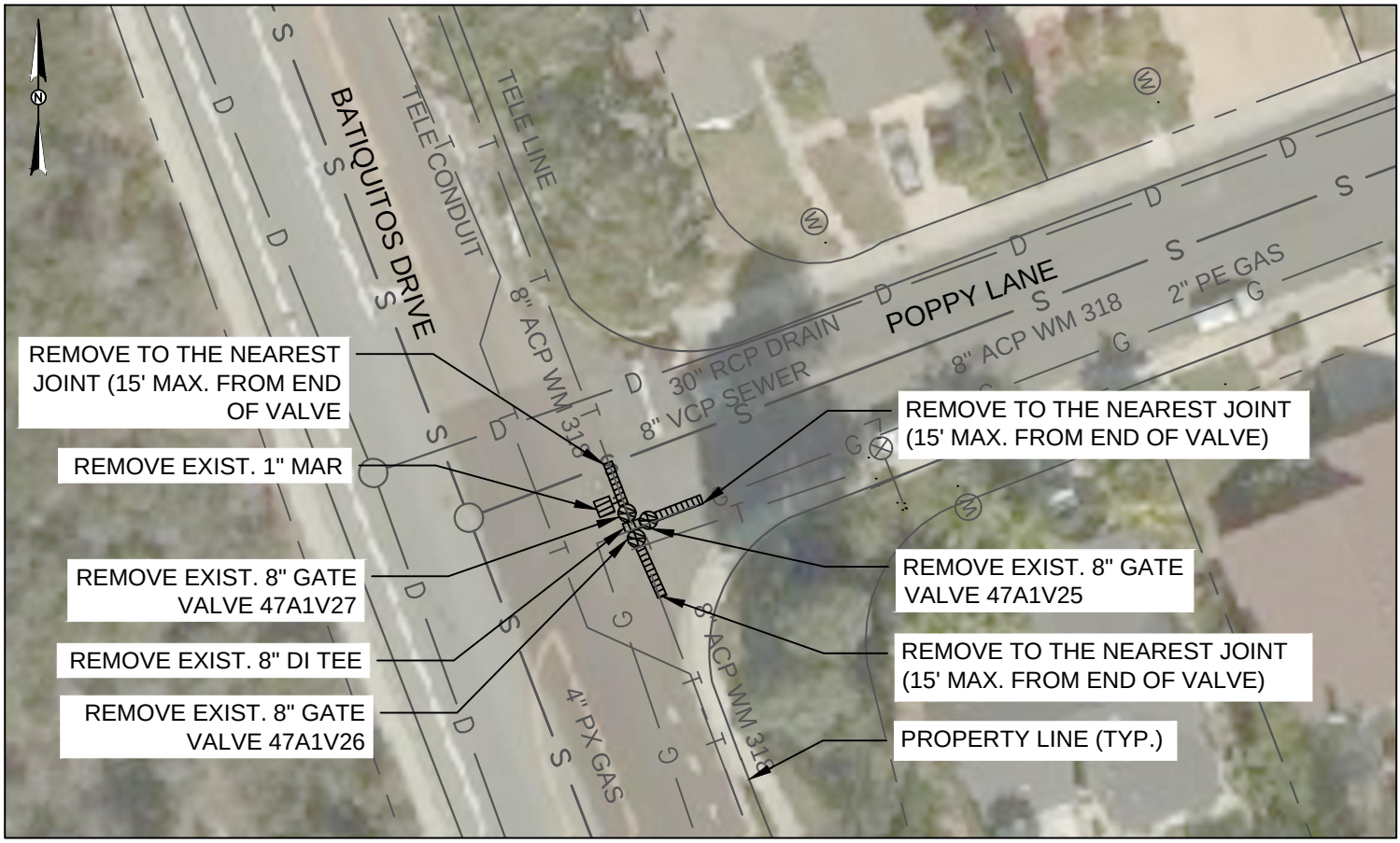

NOTE:

1. ASSUME EXISTING PAVEMENT TO BE 4" AC PAVEMENT WITH 12" OF CLASS II AGGREGATE BASE.

PLAN

SCALE: 1" = 40'

0 40 80

SCALE: 1" = 40' SCALE IN FEET

PHOTO 1 - FROM NORTH

C–17A

REVIEWED BY: INSPECTOR	RECORD DRAWING DATE	
THIS RECORD DRAWING HAS BEEN PREPARED, IN PART, BASED ON INFORMATION PROVIDED BY OTHERS. TO THE BEST KNOWLEDGE OF THE INSPECTOR INFORMATION PROVIDED IS REASONABLY ACCURATE.	DRAWING NO. XXX–X	DWN BY: CPR CHKD BY: BW RVWD BY: KH/EM
KLEINFELDER Bright People. Right Solutions.	SHEET 38 OF 48	PROJECT NO. 5019–E

CITY OF CARLSBAD
ENGINEERING DEPARTMENT

RECORD PLANS FOR:
CMWD VALVE REPLACEMENT PHASE II

SITE NO.:17 – EXISTING

ACCEPTED BY:
DISTRICT ENGINEER
DATE 6/4/2020

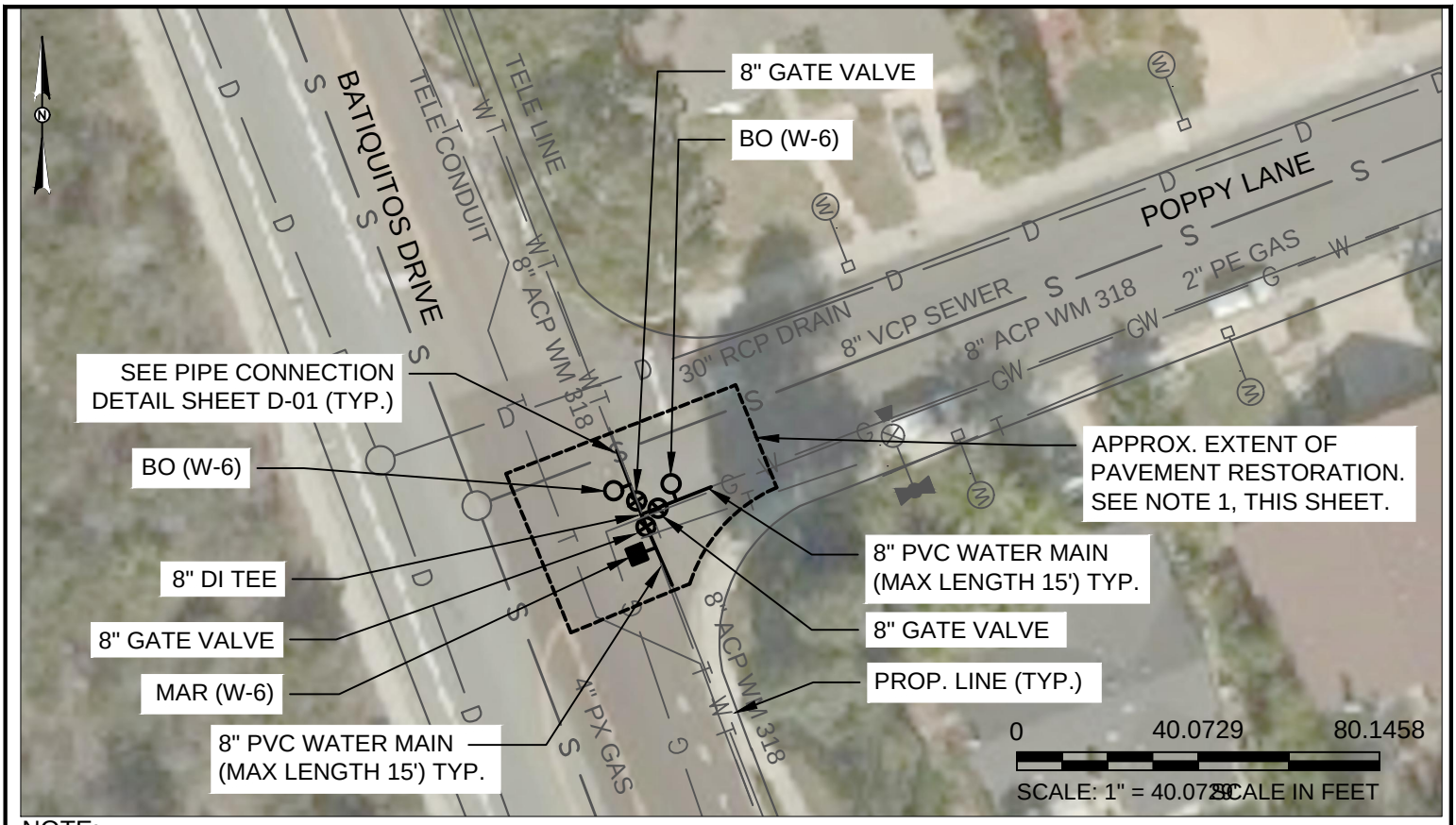

NOTE:

1. PAVEMENT RESTORATION: PROVIDE 2" MILL AND HOT MIX AC FINISH COURSE (CENTERLINE TO LIP OF GUTTER) IN ACCORDANCE WITH CITY OF CARLSBAD STANDARD DRAWING GS 28.
2. SEE CITY OF CARLSBAD STANDARD DRAWINGS GS 24 - GS 28 FOR TRENCH DETAILS.

PLAN

SCALE: 1" = 40'

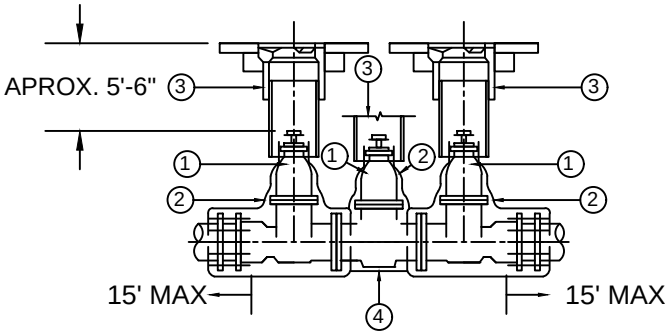

VALVE RELOCATION (SECTION A)

N.T.S

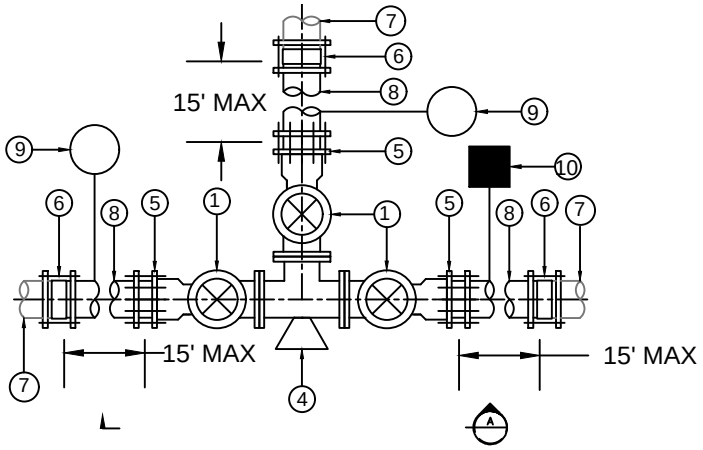

VALVE RELOCATION (PLAN)

N.T.S

ITEM	DESCRIPTION
1	GATE VALVE FLG x MJ (W-16)
2	POLYETHYLENE ENCASEMENT
3	VALVE BOX ASSEMBLY(W-13)
4	DI TEE FLG x FLG AND THRUST BLOCK (W-15)
5	RESTRAINED MECHANICAL JOINT FITTING
6	PVC TO AC TRANSITION COUPLING
7	EXISTING AC PIPE
8	C900 PVC PIPE (W-2)
9	BLOW-OFF (W-6)
10	MANUAL AIR RELEASE VALVE (W-6)

C–17B

REGISTERED PROFESSIONAL ENGINEER
KATHLEEN S HAYNES
51548
EXP. 6/30/2022
CIVIL
STATE OF CALIFORNIA

REVIEWED BY: RECORD DRAWING

INSPECTOR DATE

THIS RECORD DRAWING HAS BEEN PREPARED, IN PART, BASED ON INFORMATION PROVIDED BY OTHERS. TO THE BEST KNOWLEDGE OF THE INSPECTOR INFORMATION PROVIDED IS REASONABLY ACCURATE.

DRAWING NO. XXX–X

DWN BY: CPR
CHKD BY: BW
RVWD BY: KH/EM

KLEINFELDER Bright People. Right Solutions.

SHEET 39 OF 48

PROJECT NO. 5019–E

CITY OF CARLSBAD
ENGINEERING DEPARTMENT

RECORD PLANS FOR:
CMWD VALVE REPLACEMENT PHASE II

SITE NO.:17 – PROPOSED

ACCEPTED BY:
DISTRICT ENGINEER
7/15/2020
DATE

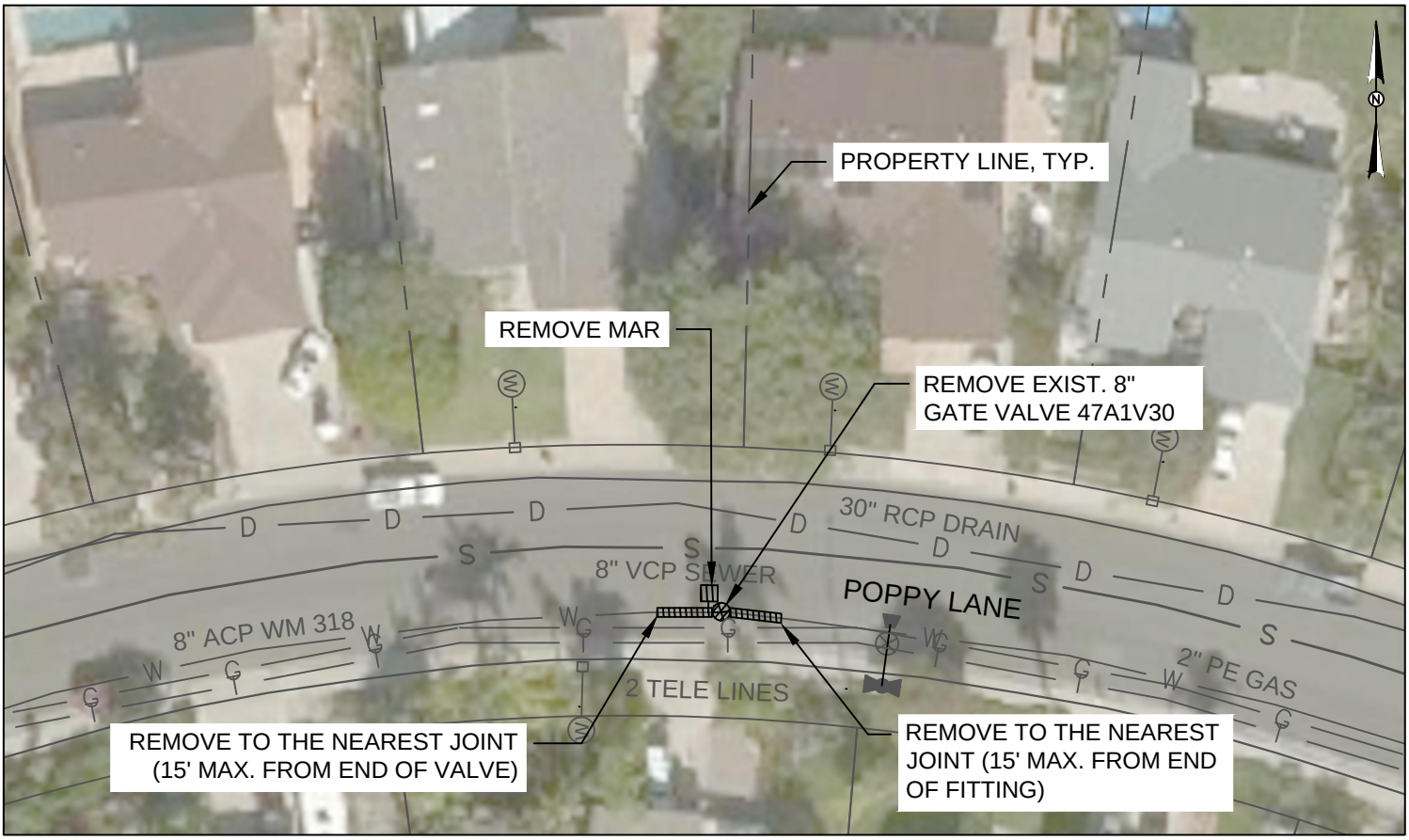

NOTE:

1. ASSUME EXISTING PAVEMENT TO BE 4" AC PAVEMENT WITH 12" OF CLASS II AGGREGATE BASE.

PLAN

SCALE: 1" = 40'

0 40 80

SCALE: 1" = 40' SCALE IN FEET

PHOTO 1 - FROM EAST

C-18A

REVIEWED BY: RECORD DRAWING INSPECTOR DATE		CITY OF CARLSBAD ENGINEERING DEPARTMENT
THIS RECORD DRAWING HAS BEEN PREPARED, IN PART, BASED ON INFORMATION PROVIDED BY OTHERS. TO THE BEST KNOWLEDGE OF THE INSPECTOR INFORMATION PROVIDED IS REASONABLY ACCURATE.	DRAWING NO. XXX-X	DWN BY: CPR CHKD BY: BW RVWD BY: KH/EM	RECORD PLANS FOR: CMWD VALVE REPLACEMENT PHASE II
KLEINFELDER Bright People. Right Solutions.	SHEET 40 OF 48	PROJECT NO. 5019-E	SITE NO.:18 - EXISTING
			ACCEPTED BY: DISTRICT ENGINEER DATE 6/4/2020

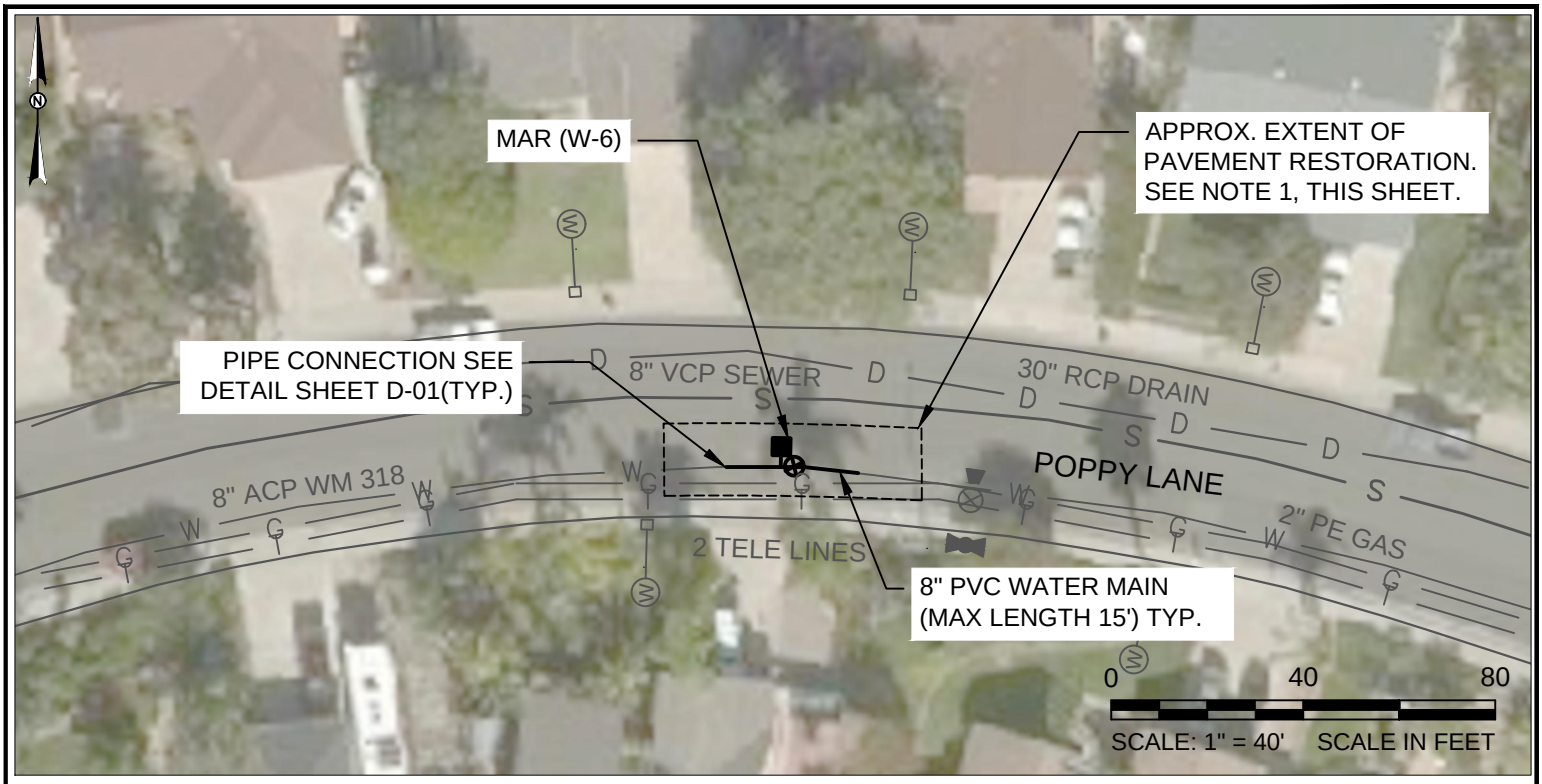

NOTE:

1. PAVEMENT RESTORATION: PROVIDE 2" MILL AND HOT MIX AC FINISH COURSE (CENTERLINE TO LIP OF GUTTER PAN) IN ACCORDANCE WITH CITY OF CARLSBAD STANDARD DRAWING GS-28.
2. SEE CITY OF CARLSBAD STANDARD DRAWINGS GS 24 - GS 28 FOR TRENCH DETAILS.

PLAN

SCALE: 1" = 40'

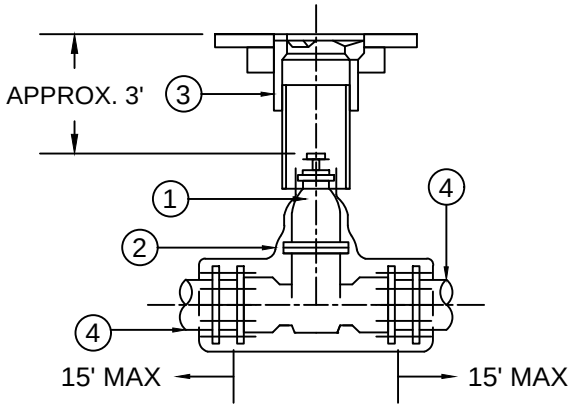

VALVE RELOCATION (SECTION A)

N.T.S

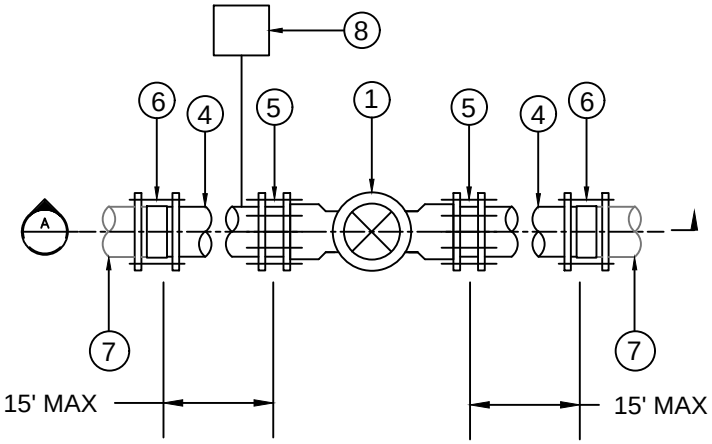

VALVE RELOCATION (PLAN)

N.T.S

ITEM	DESCRIPTION
1	GATE VALVE MJ x MJ (W-16)
2	POLYETHYLENE ENCASEMENT
3	VALVE BOX ASSEMBLY(W-13)
4	C900 PVC PIPE (W-2)
5	RESTRAINED MECHANICAL JOINT FITTING
6	PVC TO AC TRANSITION COUPLING
7	EXISTING AC PIPE
8	MANUAL AIR RELEASE ASSEMBLY (W-6)

C–18B

REGISTERED PROFESSIONAL ENGINEER
KATHLEEN S HAYNES
51548
EXP. 6/30/2022
CIVIL
STATE OF CALIFORNIA

REVIEWED BY: RECORD DRAWING

INSPECTOR DATE

THIS RECORD DRAWING HAS BEEN PREPARED, IN PART, BASED ON INFORMATION PROVIDED BY OTHERS. TO THE BEST KNOWLEDGE OF THE INSPECTOR INFORMATION PROVIDED IS REASONABLY ACCURATE.

DRAWING NO. XXX–X

DWN BY: CPR
CHKD BY: BW
RVWD BY: KH/EM

KLEINFELDER Bright People. Right Solutions.

SHEET 41 OF 48

PROJECT NO. 5019–E

CITY OF CARLSBAD
ENGINEERING DEPARTMENT

RECORD PLANS FOR:
CMWD VALVE REPLACEMENT PHASE II

SITE NO.:18 – PROPOSED

ACCEPTED BY:
DISTRICT ENGINEER
7/15/2020
DATE

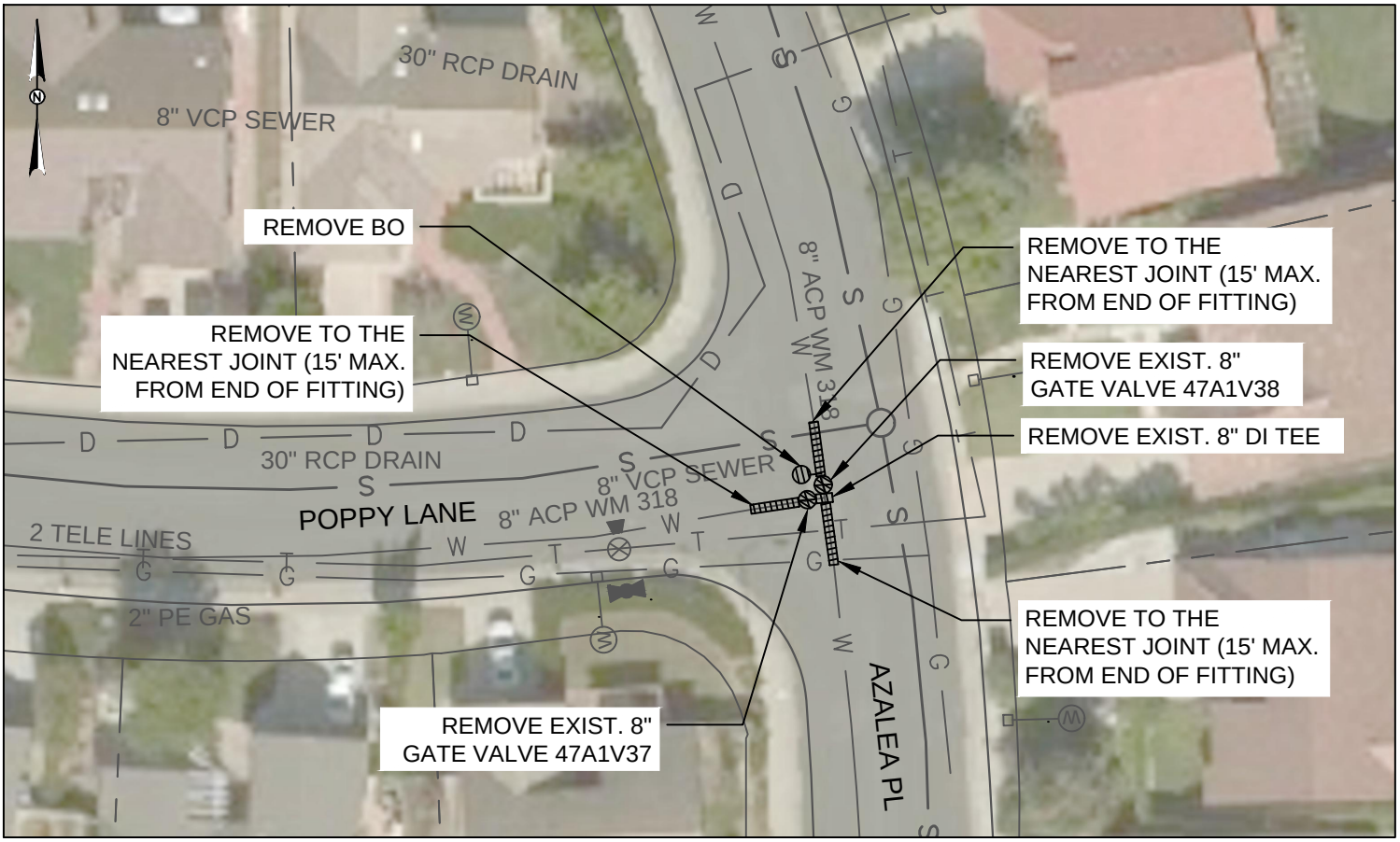

NOTE:

1. ASSUME EXISTING PAVEMENT TO BE 4" AC PAVEMENT WITH 12" OF CLASS II AGGREGATE BASE.

PLAN

SCALE: 1" = 40'

0 40 80

SCALE: 1" = 40' SCALE IN FEET

PHOTO 1 - FROM EAST

C–19A

REVIEWED BY:		RECORD DRAWING
INSPECTOR		DATE
THIS RECORD DRAWING HAS BEEN PREPARED, IN PART, BASED ON INFORMATION PROVIDED BY OTHERS. TO THE BEST KNOWLEDGE OF THE INSPECTOR INFORMATION PROVIDED IS REASONABLY ACCURATE.	DRAWING NO. XXX–X	DWN BY: CPR CHKD BY: BW RVWD BY: KH/EM
KLEINFELDER Bright People. Right Solutions.	SHEET 42 OF 48	PROJECT NO. 5019–E

CITY OF CARLSBAD
ENGINEERING DEPARTMENT

RECORD PLANS FOR:
CMWD VALVE REPLACEMENT PHASE II

SITE NO.:19 – EXISTING

ACCEPTED BY:
DISTRICT ENGINEER — DATE 6/4/2020

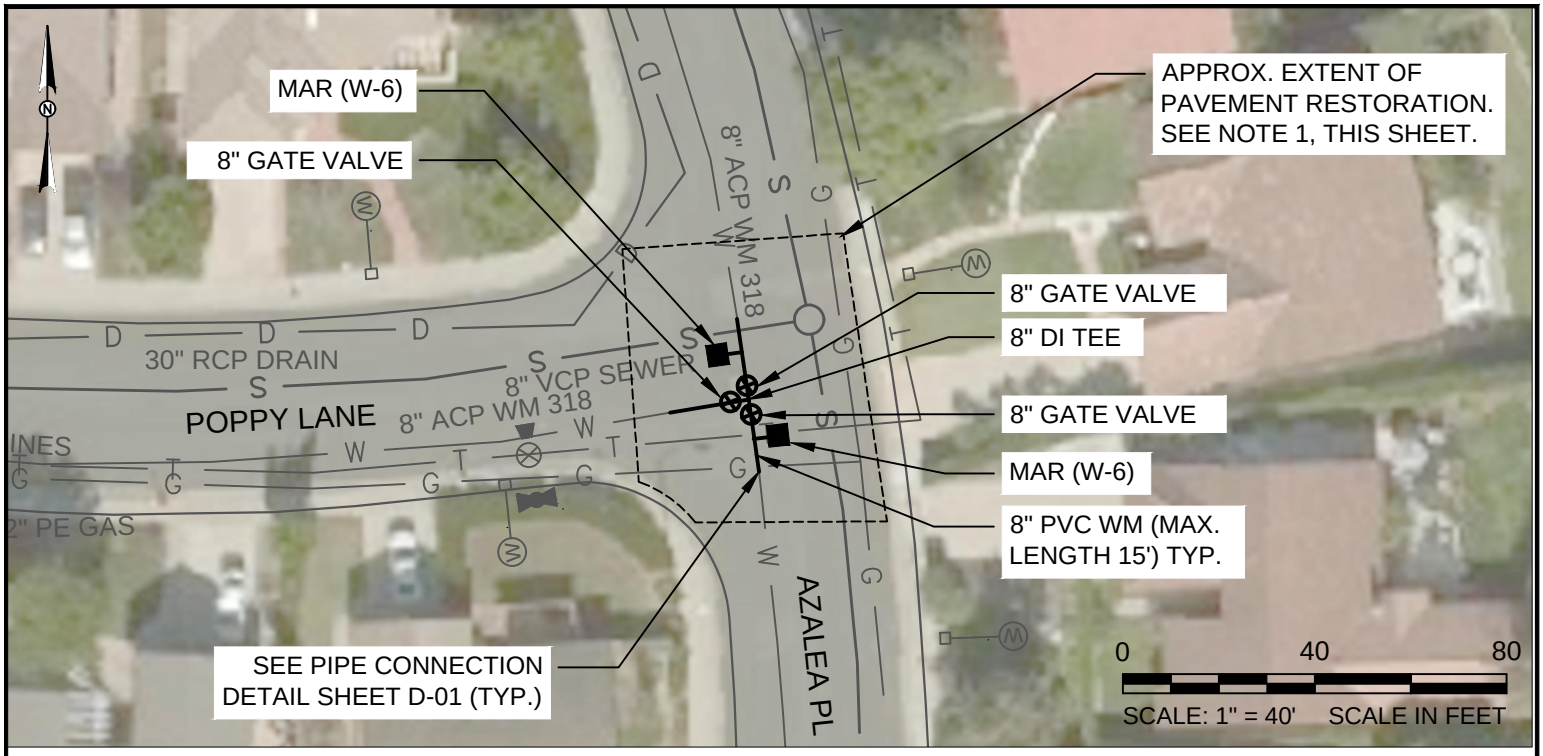

NOTE:

1. PAVEMENT RESTORATION: PROVIDE 2" MILL AND HOT MIX AC FINISH COURSE (TO LIP OF GUTTER PAN) IN ACCORDANCE WITH CITY OF CARLSBAD STANDARD DRAWING GS-28.
2. SEE CITY OF CARLSBAD STANDARD DRAWINGS GS 24 - GS 28 FOR TRENCH DETAILS.

PLAN

SCALE: 1" = 40'

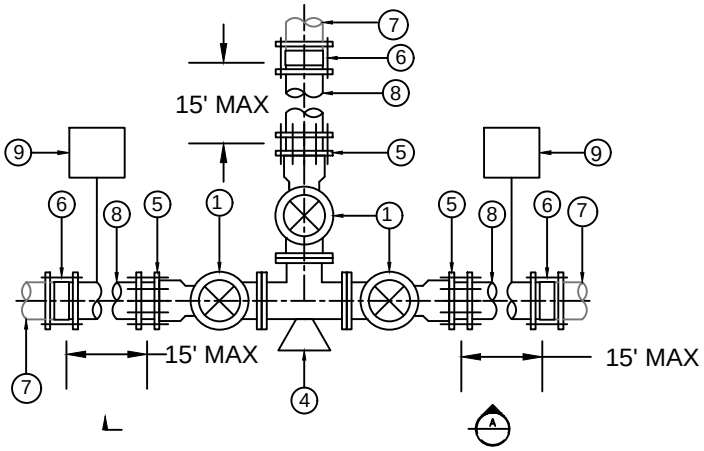

VALVE RELOCATION (PLAN)

N.T.S

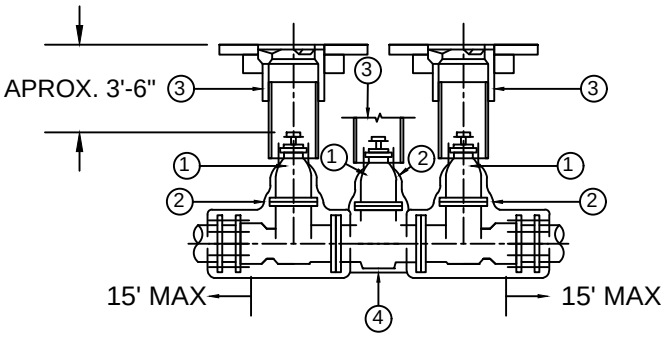

VALVE RELOCATION (SECTION A)

N.T.S

ITEM	DESCRIPTION
1	GATE VALVE FLG x MJ (W-16)
2	POLYETHYLENE ENCASEMENT
3	VALVE BOX ASSEMBLY(W-13)
4	DI TEE FLG x FLG AND THRUST BLOCK (W-15)
5	RESTRAINED MECHANICAL JOINT FITTING
6	PVC TO AC TRANSITION COUPLING
7	EXISTING AC PIPE
8	C900 PVC PIPE (W-2)
9	MANUAL AIR RELEASE VALVE (W-6)

C–19B

REGISTERED PROFESSIONAL ENGINEER KATHLEEN S HAYNES 51548 EXP. 6/30/2022 CIVIL STATE OF CALIFORNIA

REVIEWED BY: RECORD DRAWING

INSPECTOR DATE

THIS RECORD DRAWING HAS BEEN PREPARED, IN PART, BASED ON INFORMATION PROVIDED BY OTHERS. TO THE BEST KNOWLEDGE OF THE INSPECTOR INFORMATION PROVIDED IS REASONABLY ACCURATE.

DRAWING NO. XXX–X

DWN BY: CPR
CHKD BY: BW
RVWD BY: KH/EM

KLEINFELDER Bright People. Right Solutions.

SHEET 43 OF 48

PROJECT NO. 5019–E

CITY OF CARLSBAD
ENGINEERING DEPARTMENT

RECORD PLANS FOR:
CMWD VALVE REPLACEMENT PHASE II

SITE NO.:19 – PROPOSED

ACCEPTED BY:
DISTRICT ENGINEER 7/15/2020 DATE

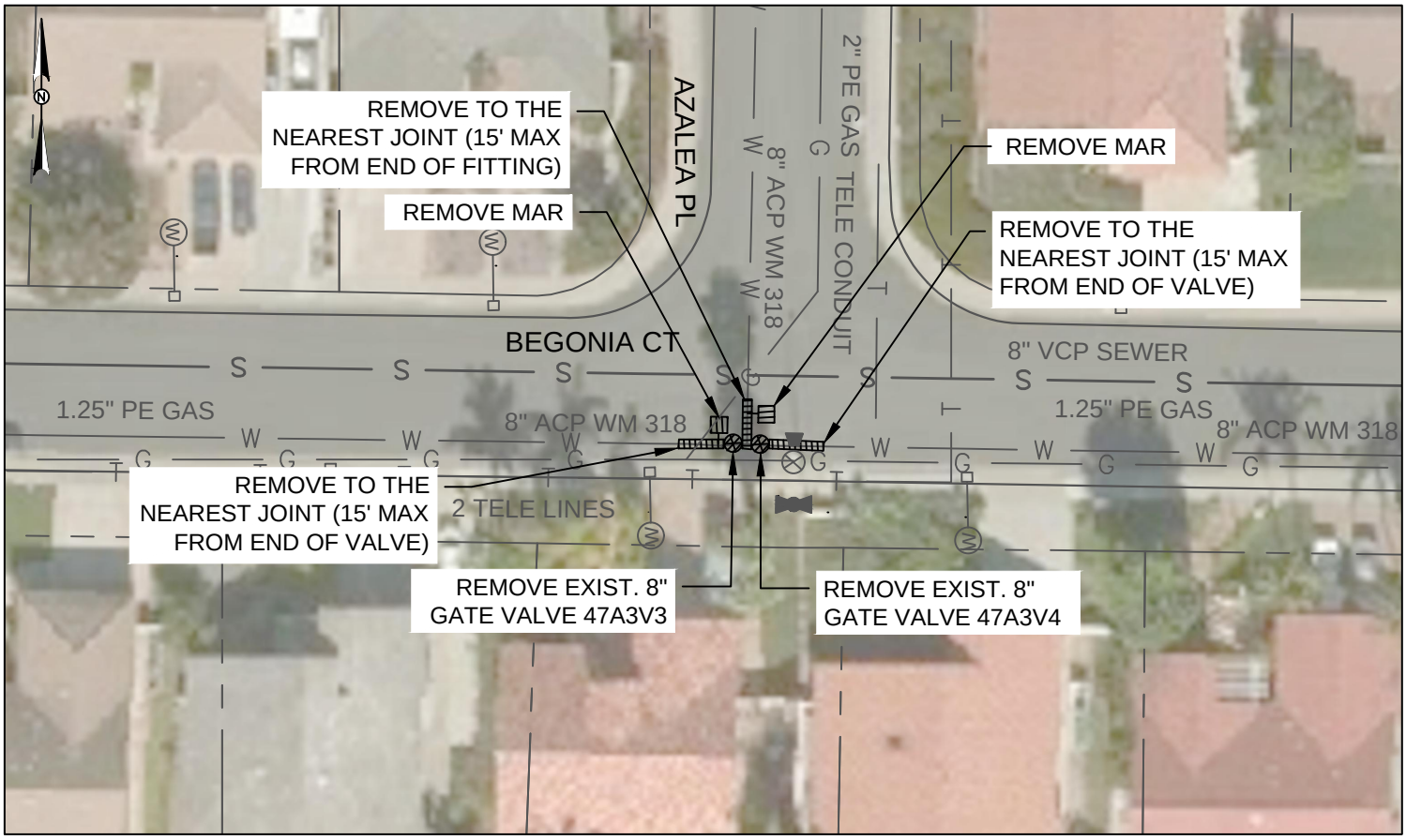

NOTE:

1. ASSUME EXISTING PAVEMENT TO BE 4" AC PAVEMENT WITH 12" OF CLASS II AGGREGATE BASE.

PLAN

SCALE: 1" = 40'

0 40 80

SCALE: 1" = 40' SCALE IN FEET

PHOTO 1 - FROM NORTH

C–20A

REVIEWED BY: RECORD DRAWING INSPECTOR DATE		CITY OF CARLSBAD ENGINEERING DEPARTMENT
THIS RECORD DRAWING HAS BEEN PREPARED, IN PART, BASED ON INFORMATION PROVIDED BY OTHERS. TO THE BEST KNOWLEDGE OF THE INSPECTOR INFORMATION PROVIDED IS REASONABLY ACCURATE.	DRAWING NO. XXX–X	DWN BY: CPR CHKD BY: BW RVWD BY: KH/EM
		RECORD PLANS FOR: CMWD VALVE REPLACEMENT PHASE II
KLEINFELDER Bright People. Right Solutions.	SHEET 44 OF 48	PROJECT NO. 5019–E
		SITE NO.: 20 – EXISTING
		ACCEPTED BY: DISTRICT ENGINEER DATE 6/4/2020

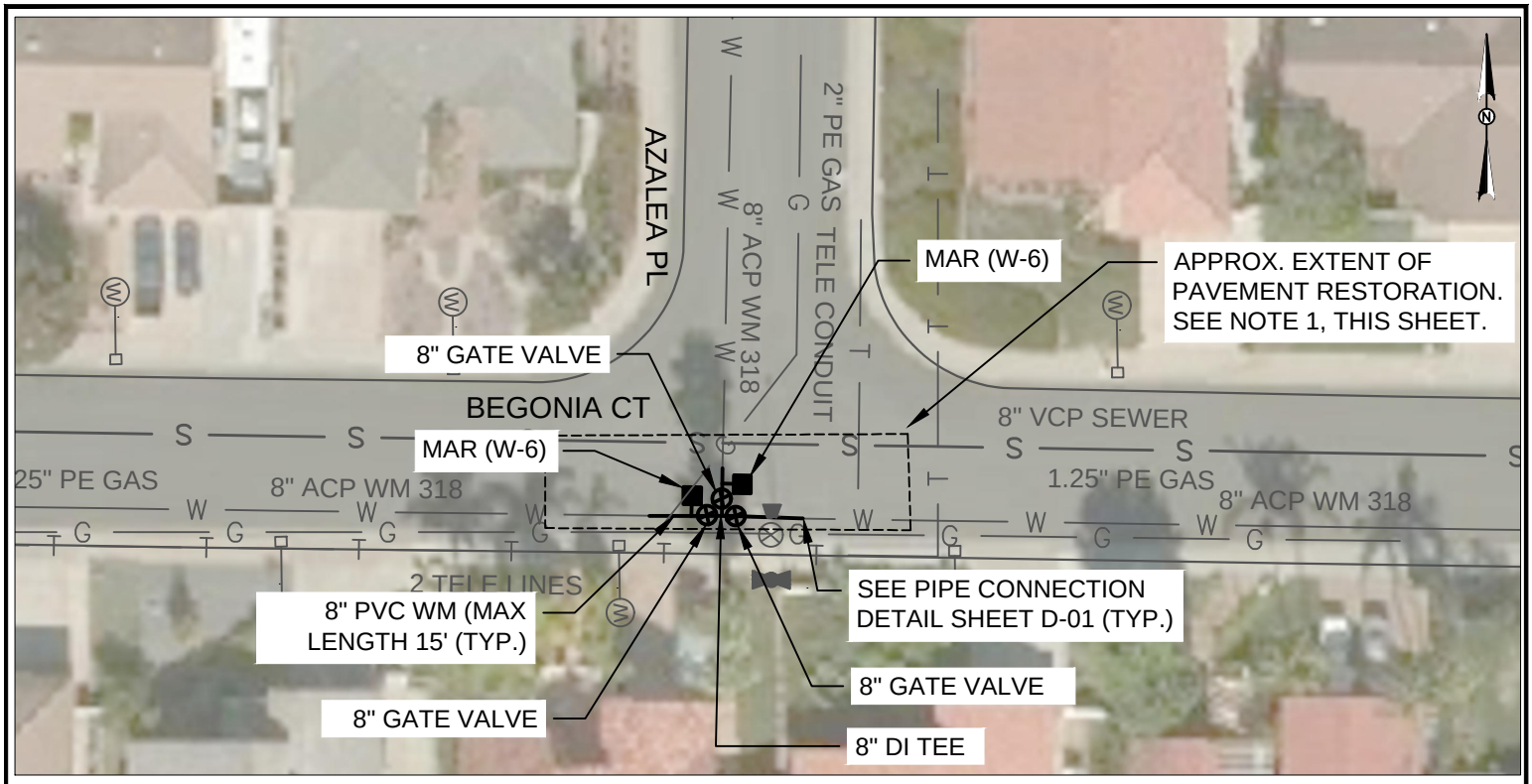

NOTE:

1. PAVEMENT RESTORATION: PROVIDE 2" MILL AND HOT MIX AC FINISH COURSE REQUIRED (CENTERLINE TO LIP OF GUTTER PAN) IN ACCORDANCE WITH CITY OF CARLSBAD STANDARD DRAWING GS-28.
2. SEE CITY OF CARLSBAD STANDARD DRAWINGS GS 24 - GS 28 FOR TRENCH DETAILS.

PLAN

SCALE: 1" = 40'

0 40 80

SCALE: 1" = 40' SCALE IN FEET

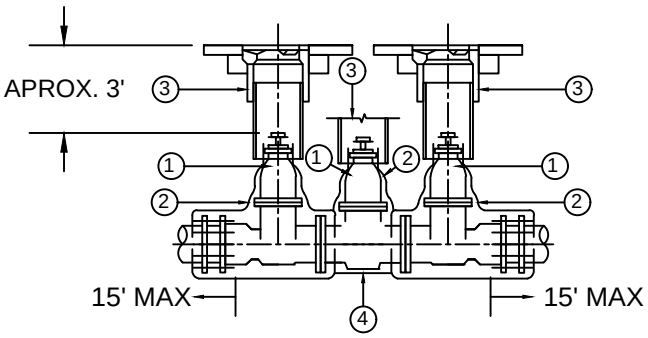

VALVE RELOCATION (SECTION A)

N.T.S

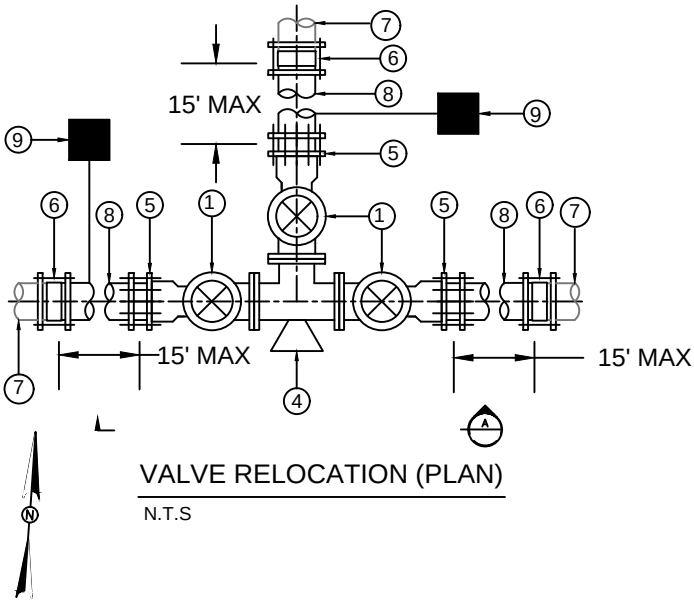

VALVE RELOCATION (PLAN)

N.T.S

ITEM	DESCRIPTION
1	GATE VALVE FLG x MJ (W-16)
2	POLYETHYLENE ENCASEMENT
3	VALVE BOX ASSEMBLY(W-13)
4	DI TEE FLG x FLG AND THRUST BLOCK (W-15)
5	RESTRAINED MECHANICAL JOINT FITTING
6	PVC TO AC TRANSITION COUPLING
7	EXISTING AC PIPE
8	C900 PVC PIPE (W-2)
9	MANUAL AIR RELEASE VALVE (W-6)

C-20B

REGISTERED PROFESSIONAL ENGINEER KATHLEEN S HAYNES 51548 EXP. 6/30/2022 CIVIL STATE OF CALIFORNIA

REVIEWED BY: RECORD DRAWING

INSPECTOR DATE

THIS RECORD DRAWING HAS BEEN PREPARED, IN PART, BASED ON INFORMATION PROVIDED BY OTHERS. TO THE BEST KNOWLEDGE OF THE INSPECTOR INFORMATION PROVIDED IS REASONABLY ACCURATE.

DRAWING NO. XXX-X

DWN BY: CPR
CHKD BY: BW
RVWD BY: KH/EM

KLEINFELDER Bright People. Right Solutions.

SHEET 45 OF 48

PROJECT NO. 5019-E

CITY OF CARLSBAD
ENGINEERING DEPARTMENT

RECORD PLANS FOR:
CMWD VALVE REPLACEMENT PHASE II

SITE NO.:20 - PROPOSED

ACCEPTED BY:

DISTRICT ENGINEER 7/15/2020 DATE

GENERAL NOTES:

1. ALL PIPE CONNECTIONS SHALL BE MADE WITH A RESTRAINED COUPLING, EXCEPT AT LOCATIONS WITH MATERIAL CHANGE.

2. WHERE PIPE MATERIAL TRANSITIONS OCCUR, A ROMAC-COUPLING SERIES OR APPROVED TRANSITION COUPLING EQUIVALENT SHALL BE USED.

3. PIPE SIZES, LENGTHS, INTERIOR AND EXTERIOR DIAMETERS MAY VARY BETWEEN PROJECT SITES. CONTRACTOR IS TO VERIFY PIPE DIMENSIONS IN FIELD PRIOR TO INSTALLATION.

4. CONTRACTOR MUST ADHERE TO ALL MANUFACTURER FURNISH AND INSTALLATION INSTRUCTIONS.

5. ALL NEWLY FURNISHED AND INSTALLED PIPE SHALL BE PVC C900, PER CMWD APPROVED MATERIALS LIST.

6. THE ORIENTATION OF THE PIPE CONNECTION MAY DIFFER FROM DETAILS BELOW. CONTRACTOR IS TO FOLLOW THE SAME METHOD OF INSTALLATION FOR THE PIPE TRANSITIONS.

7. CONTRACTOR SHALL FOLLOW ALL MITIGATION METHODS OUTLINED IN THE SPECIFICATIONS FOR REMOVAL OF ASBESTOS CEMENT PIPE.

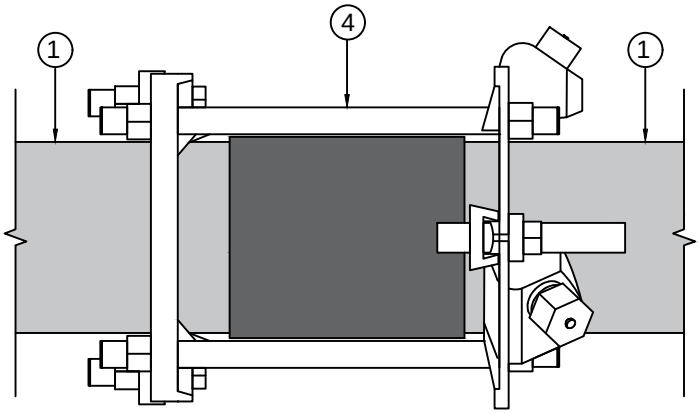

1 / D-1 PVC TO PVC PIPE CONNECTION

ITEM	DESCRIPTION
1	PVC PIPE
2	EXISTING ASBESTOS CEMENT PIPE
3	TRANSITION COUPLING
4	PVC REPAIR COUPLING WITH SPLIT RESTRAINT

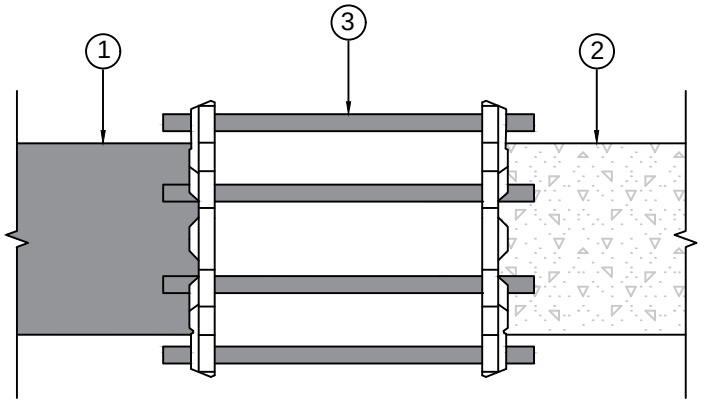

2 / D-1 PVC TO ASBESTOS CEMENT CONNECTION

D–1

REVIEWED BY: RECORD DRAWING

INSPECTOR DATE

THIS RECORD DRAWING HAS BEEN PREPARED, IN PART, BASED ON INFORMATION PROVIDED BY OTHERS. TO THE BEST KNOWLEDGE OF THE INSPECTOR INFORMATION PROVIDED IS REASONABLY ACCURATE.

DRAWING NO. XXX–X

DWN BY: CPR
CHKD BY: BW
RVWD BY: KH/EM

KLEINFELDER Bright People. Right Solutions.

SHEET 46 OF 48

PROJECT NO. 5019–E

CITY OF CARLSBAD
ENGINEERING DEPARTMENT

IMPROVEMENT PLANS FOR:
CMWD VALVE REPLACEMENT PHASE II – BID DOCUMENTS

SITE NO.:

ACCEPTED BY:

DISTRICT ENGINEER DATE 6/4/2020

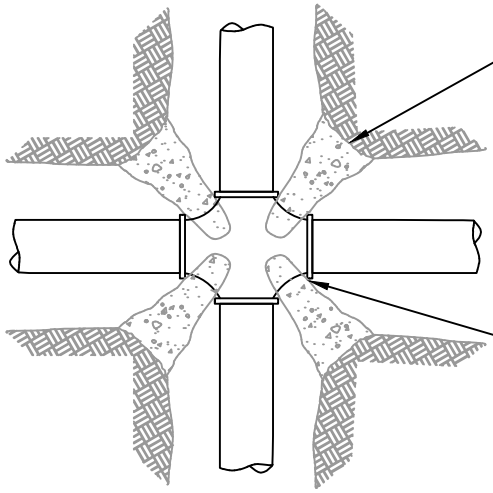

NOTES:
THRUST BLOCKS FOR CAPPED ENDS, BENDS AND TEES SHALL BE INSTALLED PER DISTRICT STD. DWGS. W-15 & W-19.

1 / - THRUST BLOCK AT CROSSES
SCALE: NTS

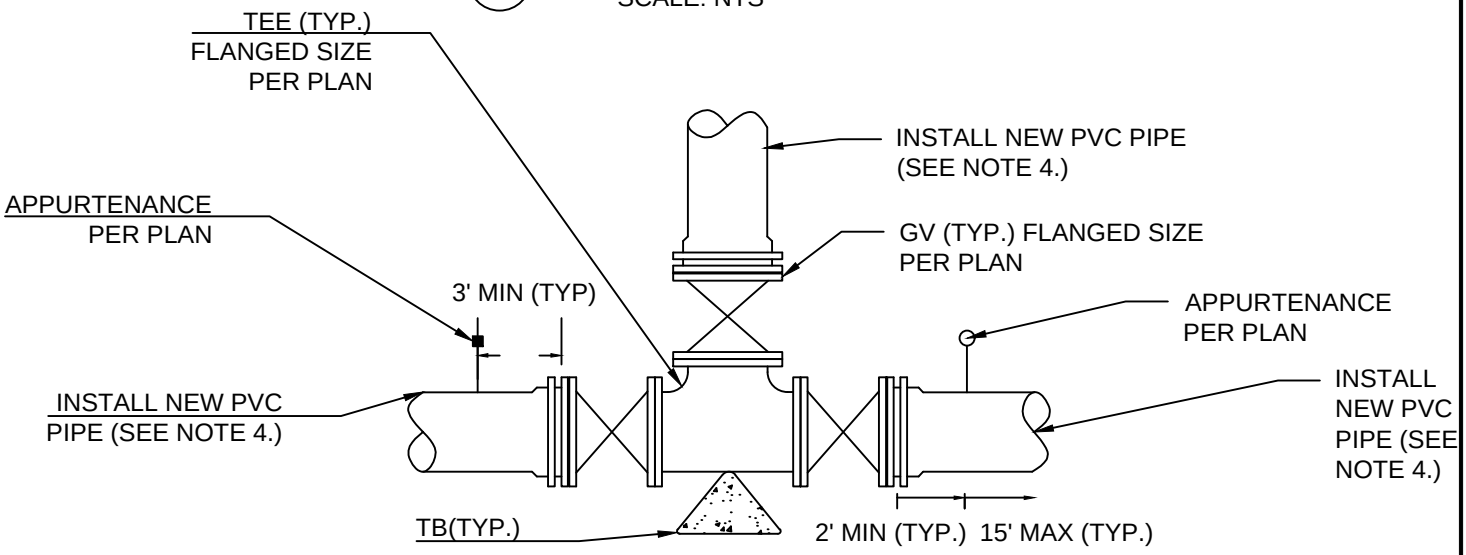

NOTES:
1. TYPICAL DETAIL APPLES TO ALL NEW IN-LINE VALVES,CROSSES,TEES, AND BENDS.
2. MAR, AVAR, AND BO TO BE 3' FROM FITTINGS
3. INSTALL GV IN ACCORDANCE WITH CMWD STD DWG W-16
4. CONTRACTOR SHALL REPLACE PIPE THROUGH THE FIRST JOINT AFTER THE VALVE CLUSTER. IF FIRST JOINT IS WITHIN 2' OF THE VALVE CONTRACTOR SHALL INSTALL THROUGH THE NEXT TWO JOINTS (15" MAX)
5. REFER TO DETAIL 1, THIS SHEET FOR THRUST BLOCKS INSTALLATION AT CROSSES. ALL OTHER THRUST BLOCKS SHALL BE DESIGNED IN ACCORDANCE WITH DISTRICT STANDARD DRAWINGS W-15 & W-19.
6. ASSUMED SOIL BEARING CAPACITY OF 1500 POUNDS PER SQUARE FOOT. CONTRACTOR IS TO VERIFY AFTER EXCAVATION AND SUBMIT A REQUEST FOR INFORMATION IF A CHANGE IS NECESSARY.

2 / - TYP. REPLACEMENT DETAIL
SCALE: NTS

D-2

REVIEWED BY: RECORD DRAWING INSPECTOR DATE		CITY OF CARLSBAD ENGINEERING DEPARTMENT
THIS RECORD DRAWING HAS BEEN PREPARED, IN PART, BASED ON INFORMATION PROVIDED BY OTHERS. TO THE BEST KNOWLEDGE OF THE INSPECTOR INFORMATION PROVIDED IS REASONABLY ACCURATE.	DRAWING NO. XXX-X	DWN BY: CPR CHKD BY: BW RVWD BY: KH/EM
		IMPROVEMENT PLANS FOR: CMWD VALVE REPLACEMENT PHASE II – BID DOCUMENTS
KLEINFELDER Bright People. Right Solutions.	SHEET 47 OF 48	PROJECT NO. 5019-E
		SITE NO.:
		ACCEPTED BY: DISTRICT ENGINEER — DATE 6/4/2020

RECORD DRAWINGS LIST

SITE 1: COMMUNITY DEVELOPMENT - DRAWINGS - Improvement - ALGA HILLS; CT 84-41; DWG 288-6; 10
SITE 1: East-to-West_1
SITE 1: North-to-South_1
SITE 1: SOUTH-TO-NORTH-1
SITE 2: West-to-East_2
SITE 3: DWG 405-7; 55
SITE 4: DWG 102-7; 1
SITE 4: DWG 119-8; 1
SITE 5: (NONE)
SITE 6: DWG 168-6; 11
SITE 7: DWG 168-6; 12 (1)
SITE 8: DWG 168-6; 12 (1)
SITE 9: COMMUNITY DEVELOPMENT - DRAWINGS - Improvement - PINE AVENUE PARK; 38022; DWG 421-5A; 1 (3)

SITE 9: COMMUNITY DEVELOPMENT - DRAWINGS - Improvement - PINE AVENUE PARK; 38022; DWG 421-5A; 18 (1)
SITE 9: COMMUNITY DEVELOPMENT - DRAWINGS - Improvement - VISTA CARLSBAD INTERCEPT SEWER (VC5B-VC11A) 2 OF 2; 3182 3528; DWG 360-5; 15 (1)
SITE 9: DWG 6C-1; 2
SITE 10: COMMUNITY DEVELOPMENT - DRAWINGS - Improvement - PINE AVENUE PARK; 38022; DWG 421-5A; 1 (3)

SITE 10: COMMUNITY DEVELOPMENT - DRAWINGS - Improvement - PINE AVENUE PARK; 38022; DWG 421-5A; 18 (1)
SITE 10: COMMUNITY DEVELOPMENT - DRAWINGS - Improvement - VISTA CARLSBAD INTERCEPT SEWER (VC5B-VC11A) 2 OF 2; 3182 3528; DWG 360-5; 15 (1)
SITE 10: DWG 6C-1; 2
SITE 11: COMMUNITY DEVELOPMENT - DRAWINGS - Improvement - PINE AVENUE PARK; 38022; DWG 421-5A; 1 (3)

SITE 11: COMMUNITY DEVELOPMENT - DRAWINGS - Improvement - PINE AVENUE PARK; 38022; DWG 421-5A; 18 (1)
SITE 11: COMMUNITY DEVELOPMENT - DRAWINGS - Improvement - VISTA CARLSBAD INTERCEPT SEWER (VC5B-VC11A) 2 OF 2; 3182 3528; DWG 360-5; 15 (1)
SITE 11: DWG 6C-1; 2
SITE 12: COMMUNITY DEVELOPMENT - DRAWINGS - Improvement - TAM-CSBD TO JEFF-REDESIGN; 3203; DWG 321-6; 47 (1)
SITE 12: COMMUNITY DEVELOPMENT - MAPS - Record of Surveys - 21338; CDP 11-02; 2011-0333443; Other
SITE 12: DWG 513-3A; 01-05
SITE 12: TAMARACK AV 8 & 10 FTAC WATER MAINS; W 3-1; DWG 137-2; 3
SITE 13: COMMUNITY DEVELOPMENT - DRAWINGS - Improvement - TAM-CSBD TO JEFF-REDESIGN; 3203; DWG 321-6; 47 (1)
SITE 13: COMMUNITY DEVELOPMENT - MAPS - Record of Surveys - 21338; CDP 11-02; 2011-0333443; Other
SITE 13: DWG 513-3A; 01-05
SITE 13: TAMARACK AV 8 & 10 FTAC WATER MAINS; W 3-1; DWG 137-2; 3
SITE 14: DWG 143-8; 2
SITE 15: (NONE)

SITE 16: COMMUNITY DEVELOPMENT - DRAWINGS - Improvement - SPINNAKER HILL UNIT 1; CT 73-39; DWG 181-2; 3
SITE 16: DWG 227-2; 5

SITE 17: COMMUNITY DEVELOPMENT - DRAWINGS - Improvement - SPINNAKER HILL UNIT 1; CT 73-39; DWG 181-2; 4
SITE 17: DWG 185-3; 3

SITE 18: COMMUNITY DEVELOPMENT - DRAWINGS - Improvement - SPINNAKER HILL UNIT 1; CT 73-39; DWG 181-2; 4
SITE 18: DWG 185-3; 3

SITE 19: COMMUNITY DEVELOPMENT - DRAWINGS - Improvement - SPINNAKER HILL UNIT 1; CT 73-39; DWG 181-2; 4
SITE 19: DWG 185-3; 3
SITE 20: COMMUNITY DEVELOPMENT - DRAWINGS - Improvement - SPINNAKER HILL UNIT 3; CT 73-39; DWG 185-9; 4 (1)
SITE 20: DWG 185-9; 4

D-3

REVIEWED BY: RECORD DRAWING

INSPECTOR DATE

THIS RECORD DRAWING HAS BEEN PREPARED, IN PART, BASED ON INFORMATION PROVIDED BY OTHERS. TO THE BEST KNOWLEDGE OF THE INSPECTOR INFORMATION PROVIDED IS REASONABLY ACCURATE.

DRAWING NO. XXX-X

DWN BY: CPR
CHKD BY: BW
RVWD BY: KH/EM

KLEINFELDER Bright People. Right Solutions.

SHEET 48 OF 48

PROJECT NO. 5019-E

CITY OF CARLSBAD
ENGINEERING DEPARTMENT

IMPROVEMENT PLANS FOR:
CMWD VALVE REPLACEMENT PHASE II - BID DOCUMENTS

SITE NO.:

ACCEPTED BY:
DISTRICT ENGINEER DATE 6/4/2020